YAMAHA

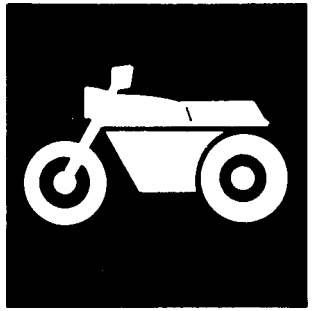

PARTS CATALOGUE

YZF–R6P (5MTF) U49
YZF–R6PC (5MTG) CALIFORNIA
YZF–R6P (5MTH) CANADA

YAMAHA GENUINE Parts & Accessories

2006-02-14

2A5MT–100E1

NEWS No.	DATE	COMMENT
PE0-MC-020057	Jul.,31,2002	FIG.18: TRANSMISSION ILLUSTRATION CORRECTION
PE0-MC-040017	Apr.,08,2004	FIG.17: CLUTCH ILLUSTRATION CORRECTION

A2

YZF–R6P/YZF–R6PC
PARTS CATALOGUE
©2001 by Yamaha Motor Co., Ltd.
1st Edition, August 2001
All rights reserved.
Any reprinting or unauthorized use
without the written permission of
Yamaha Motor Co., Ltd.
is expressly prohibited.

A3

A4

FOREWORD

This Parts Catalogue is related to the parts for the model(s) in the below frame. When you are ordering replacement parts, please refer to this Parts Catalogue and quote both part numbers and part names correctly.

YZF–R6P(5MTF,5MTH)/YZF–R6PC(5MTG)

1. Modifications or additions which have been made after issue of the Parts Catalogue will be announced in the Yamaha Parts News.
   It is advisable that you make necessary corrections to the Parts Catalogue according to the Yamaha Parts News.
2. Abbreviations
   The Following abbreviations are used in this Parts Catalogue.
   "UR" Use specified parts number.
   "UN" Use as many as needed.
   "AP" Alternate Parts
   "LM" Local Made (Parts need to be ordered locally)
   "F#" Frame No. (Applicable machine No.)
3. Parts, which are to be supplied in an assembly, are listed with a dot(.) in front of the part name as shown below.
   EXAMPLE
   CARBURETOR ASSY
   .JET, PILOT
   .NOZZLE, MAIN
4. Number of component for assembly
   The numeral appearing to the right of each component part indicates the quantity of parts for each assembly unit.

EXAMPLE

PART NO.	DESCRIPTION	Q'TY	REMARKS
2F5–83310–60	FRONT FLASHER LIGHT ASSY	2	
115–83311–60	.BULB (6V–18W)	1	
1M1–83309–60	.REFLECTOR	1	

5. Applicable colors of graphics are represented in the "REMARKS" as shown below.

PART NO.	DESCRIPTION	Q'TY	REMARKS
2N4–24110–00–X5	.FUEL TANK COMP.	2	MXR
3J1–24240–10	.GRAPHIC, FUEL TANK	1	for MXR

6. Applicable Serial No.

Engine Serial No.

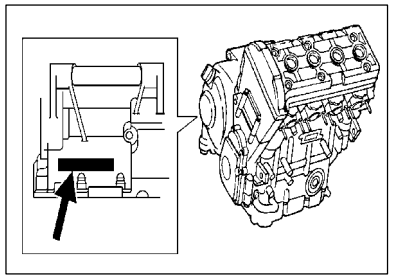

Frame Serial No.

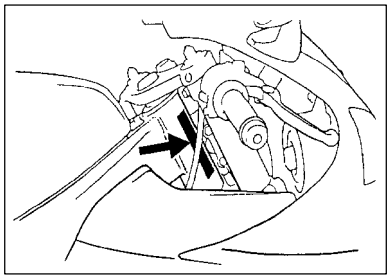

7. Note that the illustrations for reference in funding parts numbers, not to be used for assembling. When assembling, pleas use the applicable service manual.
8. The asterisk (*) before a reference number indicates modification items after the first edition.

MODEL LABEL

(1) A label called “Model Label” is affixed in the location as indicated in (3) below. When using this parts catalogue, please be sure to cross–refer the “model code – production code No.” in the catalogue to the “model code – production code No. “indicated on the Model Label affixed onto the product concemed.

(2) “Model Label”Indication

	a b
○	xxxx – xxx
●	x c

a: Model Type Code
b: Production Code No.
c: Colouring Type

○	4TW1–010
●	A

(3) Model Label Affixing Location

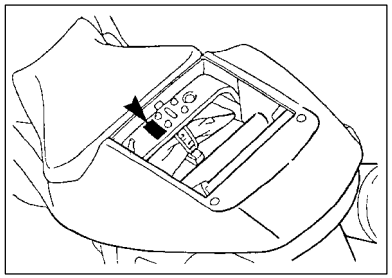

(4) Model Code – Production Code Number of Model Listed in This Parts Catalog

Model Code	Production Code No.	Country (destination)	Model Code	Production Code No.	Country (destination)
5MTF	010	U49			
5MTG	010	CALIFORNIA			
5MTH	010	CANADA			

(5) Colouring Information

Colouring type code	Colour code	Colour Name	Abbrevi-ation
A	0564	DEEP PURPLISH BLUE METALLIC C	DPBMC
B	0121	VIVID RED COCKTAIL 1	VRC1

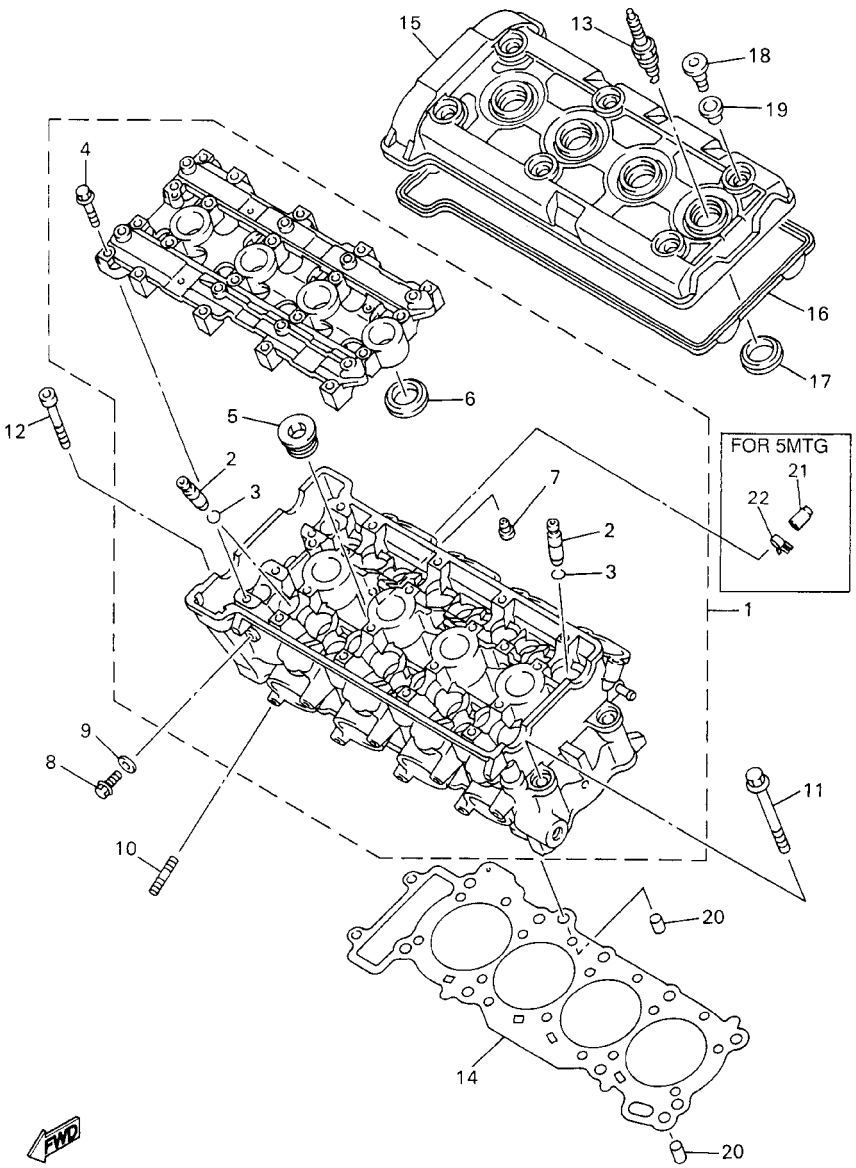

FIG. 1 CYLINDER

REF. NO.	PART NO.	DESCRIPTION	5MTF	5MTG	5MTH			REMARKS
1	5MT–11101–00	CYLINDER HEAD ASSY	1		1			
	5GV–11101–10	CYLINDER HEAD ASSY		1				
2	5EB–11133–10	.GUIDE, INTAKE VALVE	16	16	16			
3	93440–10153	.CIRCLIP	16	16	16			
4	90105–067A6	.BOLT, FLANGE	20	20	20			
5	90340–27001	.PLUG, STRAIGHT SCREW	3	3	3			
6	5EB–11195–00	.GASKET	4	4	4			
7	11H–15138–00	.NOZZLE 1	1	1	1			
8	95027–08012	BOLT, FLANGE	1	1	1			
9	90430–08119	GASKET	1	1	1			
10	95617–08625	BOLT, STUD	8	8	8			
11	90119–10003	BOLT, WITH WASHER	10	10	10			
12	91317–06045	BOLT	2	2	2			
13	94701–00402	PLUG, SPARK (NGK CR10EK)	4		4			
	94701–00403	PLUG, SPARK		4				
14	5EB–11181–00	GASKET, CYLINDER HEAD 1	1	1	1			
15	5EB–11191–00	COVER, CYLINDER HEAD 1	1	1	1			
16	5EB–11193–00	GASKET, HEAD COVER 1	1	1	1			
17	5EB–11195–00	GASKET	4	4	4			
18	90109–066F0	BOLT	6	6	6			
19	4KG–1111G–00	RUBBER, MOUNT 1	6	6	6			
20	99530–10114	PIN, DOWEL	2	2	2			
21	16G–13569–00	PLUG, BLIND		1				
22	90467–11028	CLIP		1				

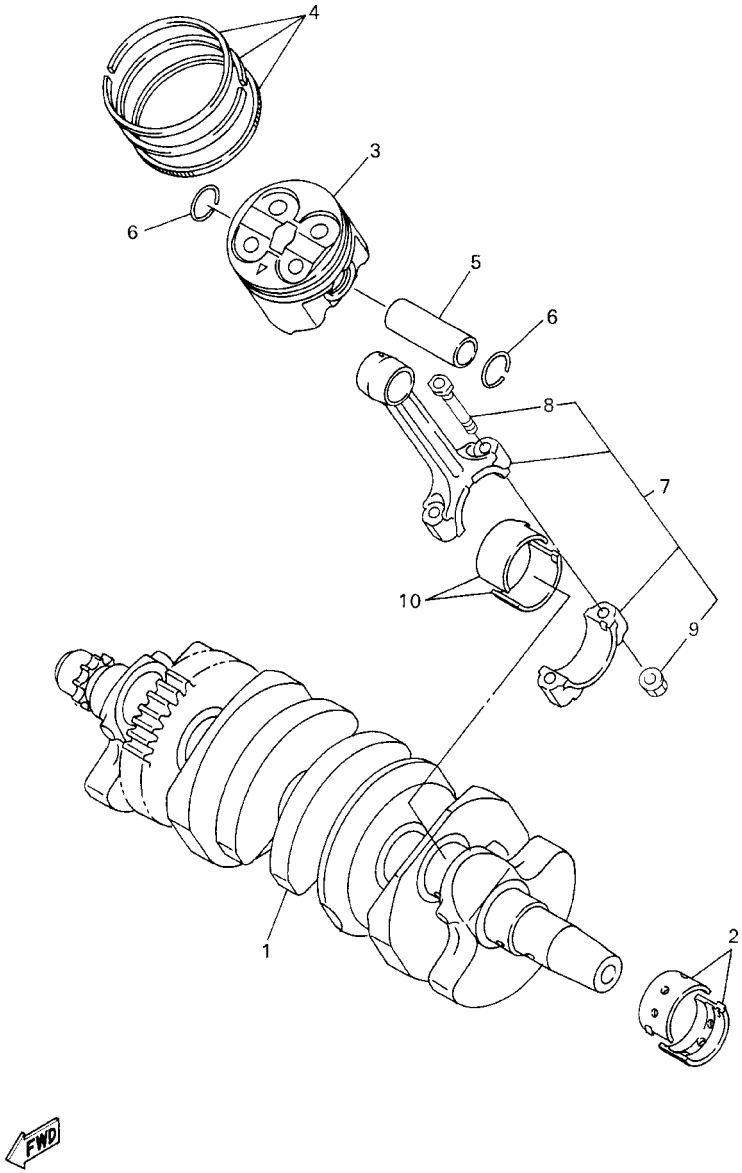

FIG. 2 CRANKSHAFT. PISTON

REF. NO.	PART NO.	DESCRIPTION	5MTF	5MTG	5MTH			REMARKS
1	5EB–11411–00	CRANKSHAFT	1	1	1			
2	5EB–11416–00	PLANE BEARING, CRANKSHAFT 1	10	10	10			UR BLUE
	5EB–11416–10	PLANE BEARING, CRANKSHAFT 1	10	10	10			UR BLACK
	5EB–11416–20	PLANE BEARING, CRANKSHAFT 1	10	10	10			UR BROWN
	5EB–11416–30	PLANE BEARING, CRANKSHAFT 1	10	10	10			UR GREEN
	5EB–11416–A0	PLANE BEARING, CRANKSHAFT 1	10	10	10			UR WHITE
3	5MT–11631–00	PISTON (STD)	4	4	4			
4	5EB–11603–10	PISTON RING SET (STD)	4	4	4			
5	5EB–11633–00	PIN, PISTON	4	4	4			
6	93450–17129	CIRCLIP	8	8	8			
7	5MT–11650–00	CONNECTING ROD ASSY	4	4	4			
8	5EB–11654–00	.BOLT, CONNECTING ROD	2	2	2			
9	90179–07652	.NUT	2	2	2			
10	4TV–11656–00	PLANE BEARING, CONNECTING ROD	8	8	8			UR BLUE
	4TV–11656–10	PLANE BEARING, CONNECTING ROD	8	8	8			UR BLACK
	4TV–11656–20	PLANE BEARING, CONNECTING ROD	8	8	8			UR BROWN
	4TV–11656–30	PLANE BEARING, CONNECTING ROD	8	8	8			UR GREEN

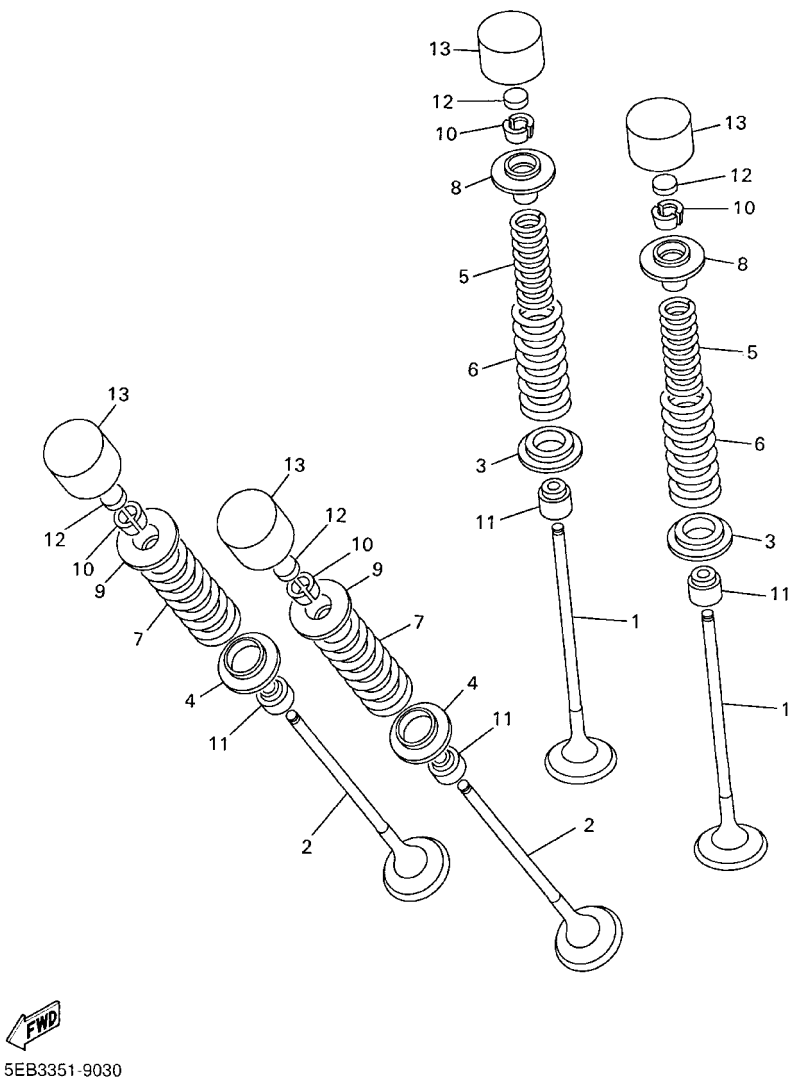

FIG. 3 VALVE

REF. NO.	PART NO.	DESCRIPTION	5MTF	5MTG	5MTH			REMARKS
1	5EB–12111–00	VALVE, INTAKE	8	8	8			
2	5EB–12121–00	VALVE, EXHAUST	8	8	8			
3	5EB–12116–00	SEAT, VALVE SPRING	8	8	8			
4	5EB–12126–00	SEAT, VALVE SPRING 2	8	8	8			
5	5EB–12113–00	SPRING, VALVE INNER	8	8	8			
6	5EB–12114–00	SPRING, VALVE OUTER	8	8	8			
7	5EB–12124–01	SPRING, VALVE OUTER	8	8	8			
8	5EB–12117–00	RETAINER, VALVE SPRING	8	8	8			
9	5EB–12127–00	RETAINER, VALVE SPRING	8	8	8			
10	1HX–12118–00	COTTER, VALVE	32	32	32			
11	4TV–12119–00	SEAL, VALVE STEM	16	16	16			
12	1HX–12168–00	PAD, ADJUSTING 2 (1.20)	16	16	16			UR
	1HX–12168–20	PAD, ADJUSTING 2 (1.25)	16	16	16			UR
	1HX–12168–40	PAD, ADJUSTING 2 (1.30)	16	16	16			UR
	1HX–12168–60	PAD, ADJUSTING 2 (1.35)	16	16	16			UR
	1HX–12168–80	PAD, ADJUSTING 2 (1.40)	16	16	16			UR
	1HX–12168–A0	PAD, ADJUSTING 2 (1.45)	16	16	16			UR
	1HX–12168–F0	PAD, ADJUSTING 2 (1.50)	16	16	16			UR
	1HX–12168–H1	PAD, ADJUSTING 2 (1.55)	16	16	16			UR
	1HX–12168–K1	PAD, ADJUSTING 2 (1.60)	16	16	16			UR
	1HX–12168–M1	PAD, ADJUSTING 2 (1.65)	16	16	16			UR
	1HX–12168–R1	PAD, ADJUSTING 2 (1.70)	16	16	16			UR
	1HX–12168–U1	PAD, ADJUSTING 2 (1.75)	16	16	16			UR
	1HX–12168–W1	PAD, ADJUSTING 2 (1.80)	16	16	16			UR
	1HX–12168–Y1	PAD, ADJUSTING 2 (1.85)	16	16	16			UR
	1HX–12169–11	PAD, ADJUSTING 2 (1.90)	16	16	16			UR
	1HX–12169–31	PAD, ADJUSTING 2 (1.95)	16	16	16			UR

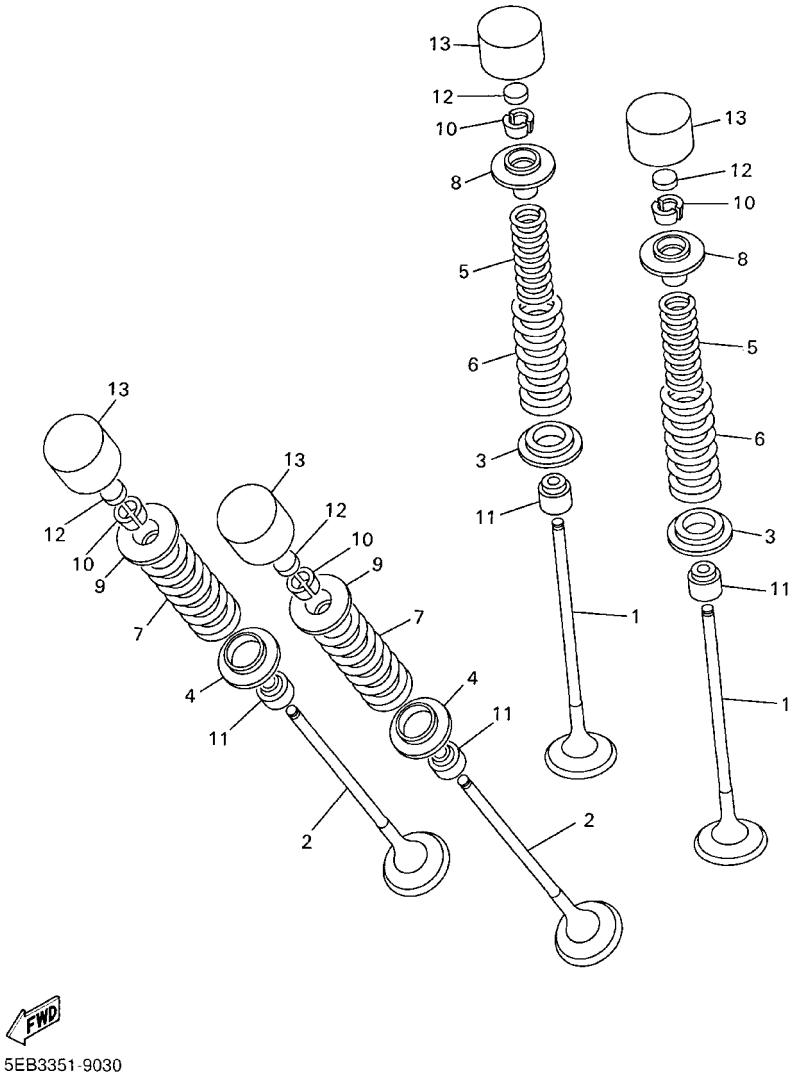

FIG. 3 VALVE

REF. NO.	PART NO.	DESCRIPTION	5MTF	5MTG	5MTH			REMARKS
12	1HX–12169–50	PAD, ADJUSTING 2 (2.00)	16	16	16			UR
	1HX–12169–70	PAD, ADJUSTING 2 (2.05)	16	16	16			UR
	1HX–12169–90	PAD, ADJUSTING 2 (2.10)	16	16	16			UR
	1HX–12169–E0	PAD, ADJUSTING 2 (2.15)	16	16	16			UR
	1HX–12169–G0	PAD, ADJUSTING 2 (2.20)	16	16	16			UR
	1HX–12169–J0	PAD, ADJUSTING 2 (2.25)	16	16	16			UR
	1HX–12169–L0	PAD, ADJUSTING 2 (2.30)	16	16	16			UR
	1HX–12169–N0	PAD, ADJUSTING 2 (2.35)	16	16	16			UR
	1HX–12169–T0	PAD, ADJUSTING 2 (2.40)	16	16	16			UR
13	5EB–12153–20	LIFTER, VALVE	16	16	16			UR BLUE
	5EB–12153–09	LIFTER, VALVE	16	16	16			AP GREEN

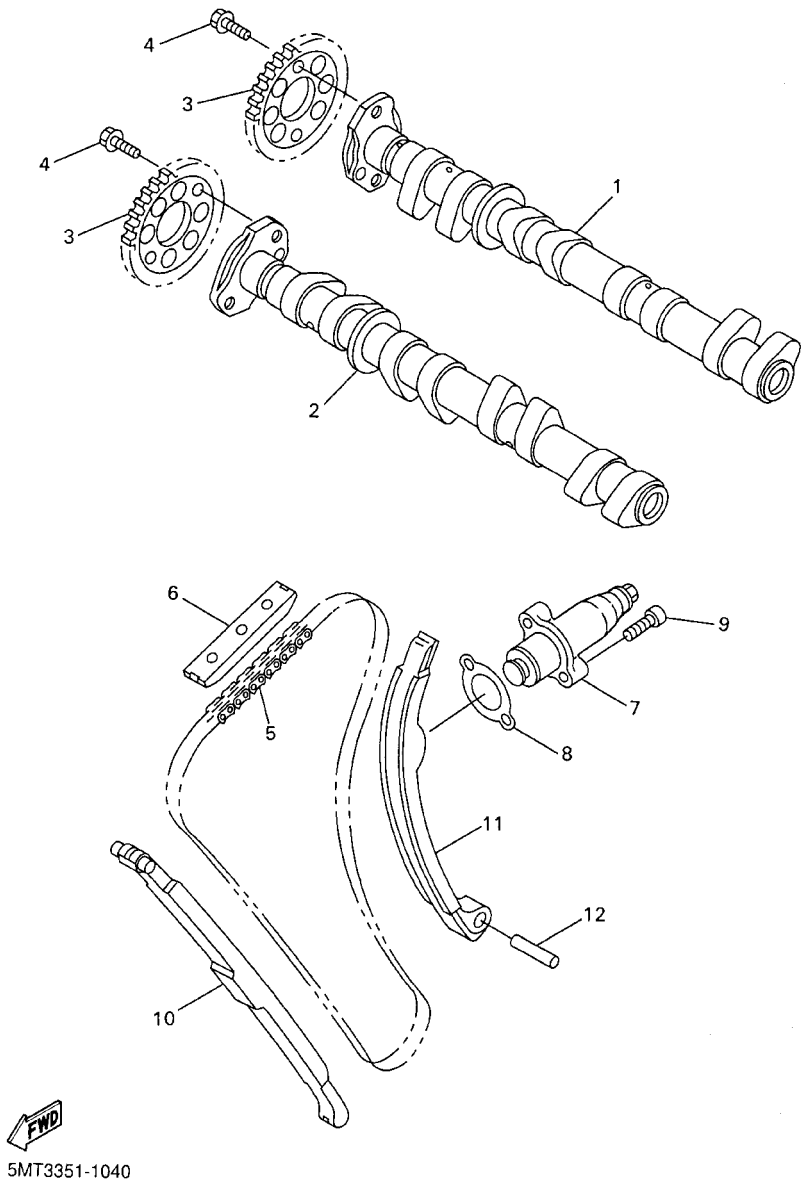

FIG. 4 CAMSHAFT. CHAIN

REF. NO.	PART NO.	DESCRIPTION	5MTF	5MTG	5MTH			REMARKS
1	5EB–12171–00	CAMSHAFT 1	1		1			
	5GV–12171–00	CAMSHAFT 1		1				
2	5EB–12181–00	CAMSHAFT 2	1		1			
	5GV–12181–00	CAMSHAFT 2		1				
3	5EB–12176–00	SPROCKET, CAM CHAIN	2	2	2			
4	90105–07342	BOLT, FLANGE	4	4	4			
5	94591–49120	CHAIN	1	1	1			
6	5BE–12241–00	GUIDE, STOPPER 2	1	1	1			
7	5MT–12210–00	TENSIONER ASSY, CAM CHAIN	1	1	1			
8	4FM–12213–00	GASKET, TENSIONER CASE	1	1	1			
9	91317–06025	BOLT	2	2	2			
10	5EB–12251–00	DAMPER, CHAIN 1	1	1	1			
11	5EB–12252–00	DAMPER, CHAIN 2	1	1	1			
12	93607–44190	PIN, DOWEL	1	1	1			

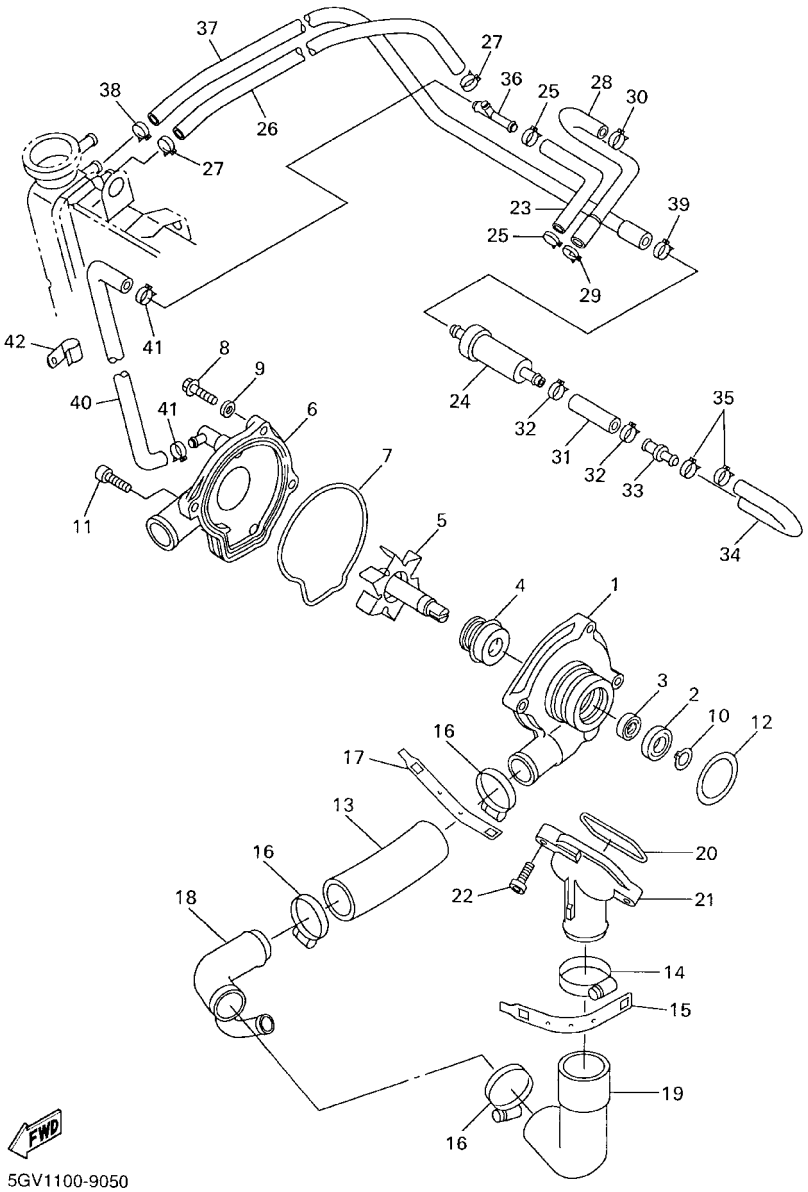

FIG. 5 WATER PUMP

REF. NO.	PART NO.	DESCRIPTION	5MTF	5MTG	5MTH			REMARKS
1	5EB–12421–00	HOUSING, WATER PUMP	1	1	1			
2	93306–00106	BEARING	1	1	1			
3	93101–12173	OIL SEAL	1	1	1			
4	11H–12438–10	SEAL, MECHANICAL	1	1	1			
5	5EB–12450–00	IMPELLER SHAFT ASSY	1	1	1			
6	5EB–12422–00	COVER, HOUSING	1	1	1			
7	5EB–12439–00	O–RING	1	1	1			
8	95024–06020	BOLT, FLANGE	2	2	2			
9	90430–06014	GASKET	1	1	1			
10	99009–12400	CIRCLIP	1	1	1			
11	90110–06149	BOLT, HEXAGON SOCKET HEAD	2	2	2			
12	93210–33133	O–RING	1	1	1			
13	4NK–12579–00	HOSE 4	1	1	1			
14	90450–38040	HOSE CLAMP ASSY	1	1	1			
15	5GV–1246A–00	COVER 1	1	1	1			
16	90450–35001	HOSE CLAMP ASSY	3	3	3			
17	5GV–1246E–00	COVER 2	1	1	1			
18	5EB–12581–00	JOINT, HOSE 1	1	1	1			
19	5EB–12577–00	HOSE 2	1	1	1			
20	93210–47675	O–RING	1	1	1			
21	5EB–12469–00	JOINT 1	1	1	1			
22	91317–06020	BOLT	2	2	2			
23	5EB–1243A–00	HOSE 1	1	1	1			
24	4SV–1240G–00	THERMOSTAT ASSY	1		1			
25	90467–11090	CLIP	2	2	2			
26	5EB–1243E–00	HOSE 2	1	1	1			
27	90467–11090	CLIP	2	2	2			

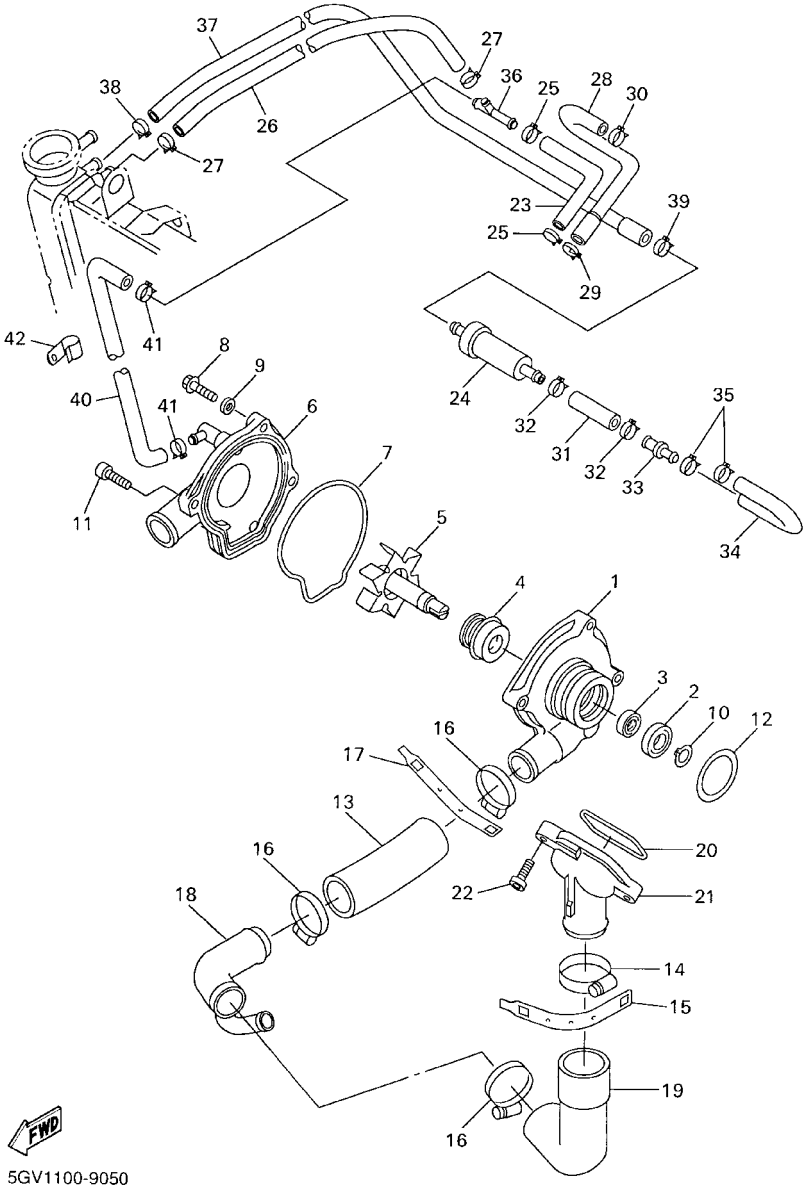

FIG. 5 WATER PUMP

REF. NO.	PART NO.	DESCRIPTION	5MTF	5MTG	5MTH			REMARKS
28	5EB–1243F–00	HOSE,3	1		1			
29	90467–11090	CLIP	1		1			
30	90467–09037	CLIP	1		1			
31	90445–123G5	HOSE (L40)	1		1			
32	90467–11044	CLIP	2		2			
33	4TV–12581–00	JOINT, HOSE 1	1		1			
34	5EB–12551–00	HOSE 7	1		1			
35	90467–09037	CLIP	2		2			
36	90413–07023	WAY 3	1	1	1			
37	5EB–12552–00	HOSE 8	1		1			
38	90467–11090	CLIP	1		1			
39	90467–11044	CLIP	1		1			
40	5EB–1244G–00	HOSE, 4	1	1	1			
41	90467–11090	CLIP	2	2	2			
42	90465–08395	CLAMP	1	1	1			

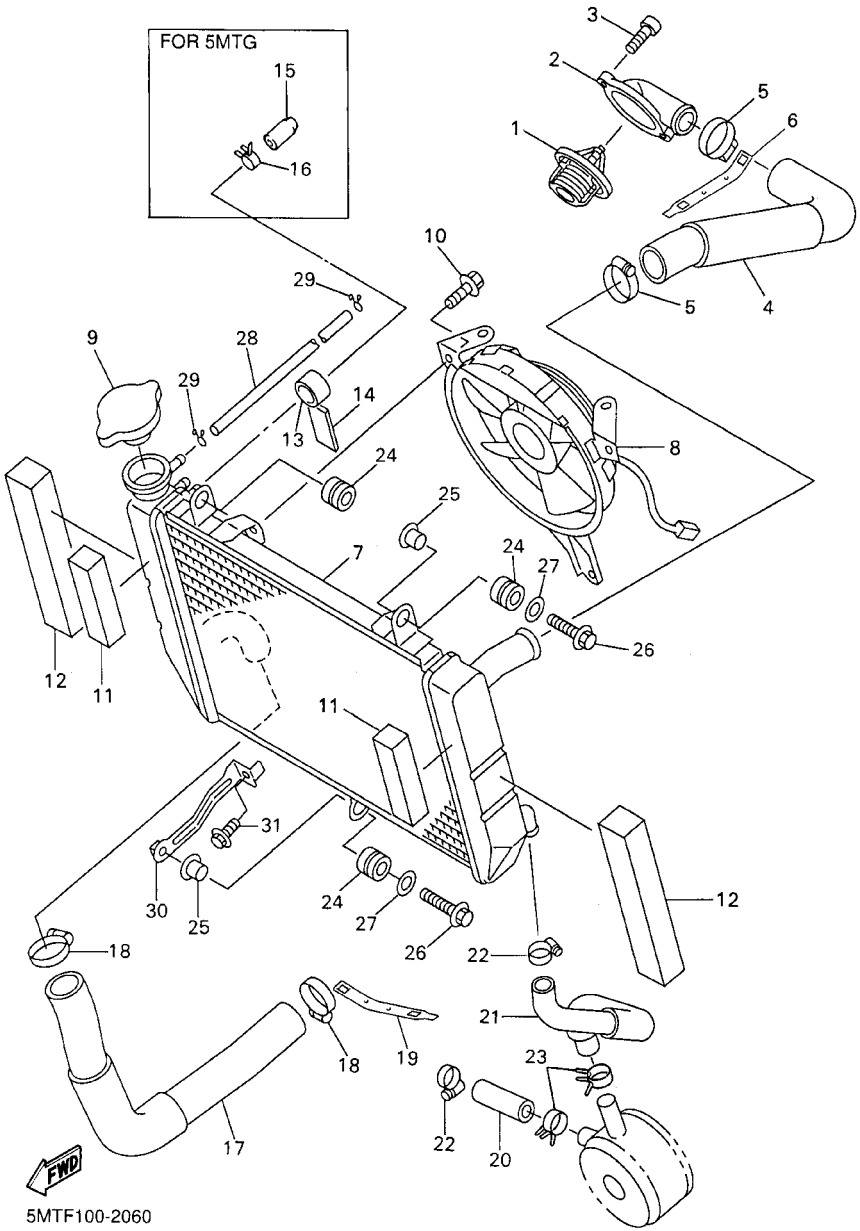

FIG. 6 RADIATOR. HOSE

REF. NO.	PART NO.	DESCRIPTION	5MTF	5MTG	5MTH			REMARKS
1	5EB–12410–00	THERMOSTAT ASSY	1		1			
	3GM–12410–00	THERMOSTAT ASSY		1				
2	5EB–12413–00	COVER, THERMOSTAT	1	1	1			
3	91317–06020	BOLT	2	2	2			
4	5EB–12578–00	HOSE 3	1	1	1			
5	90450–35001	HOSE CLAMP ASSY	2	2	2			
6	5GV–1246E–00	COVER 2	1	1	1			
7	5EB–12461–00	RADIATOR ASSY	1	1	1			
8	5EB–12405–00	BLOWER ASSY	1	1	1			
9	4JH–12462–00	CAP, RADIATOR	1	1	1			
10	95811–06010	BOLT, FLANGE	3	3	3			
11	5EB–12659–00	DAMPER, AIR SHROUD 2	2	2	2			
12	5EB–12668–00	DAMPER, AIR SHROUD 3	2	2	2			
13	5EB–12498–00	PROTECTOR	1	1	1			
14	3XV–1246A–10	COVER 1	1	1	1			
15	16G–13569–00	PLUG, BLIND		1				
16	90467–11028	CLIP		1				
17	5EB–12579–00	HOSE 4	1	1	1			
18	90450–35001	HOSE CLAMP ASSY	2	2	2			
19	5GV–1246E–00	COVER 2	1	1	1			
20	5EB–12588–00	HOSE 5	1	1	1			
21	5EB–12589–00	HOSE 6	1	1	1			
22	90450–25037	HOSE CLAMP ASSY	2	2	2			
23	90467–19160	CLIP	2	2	2			
24	90480–15363	GROMMET	3	3	3			
25	90387–07391	COLLAR	2	2	2			
26	95807–06025	BOLT, FLANGE	2	2	2			

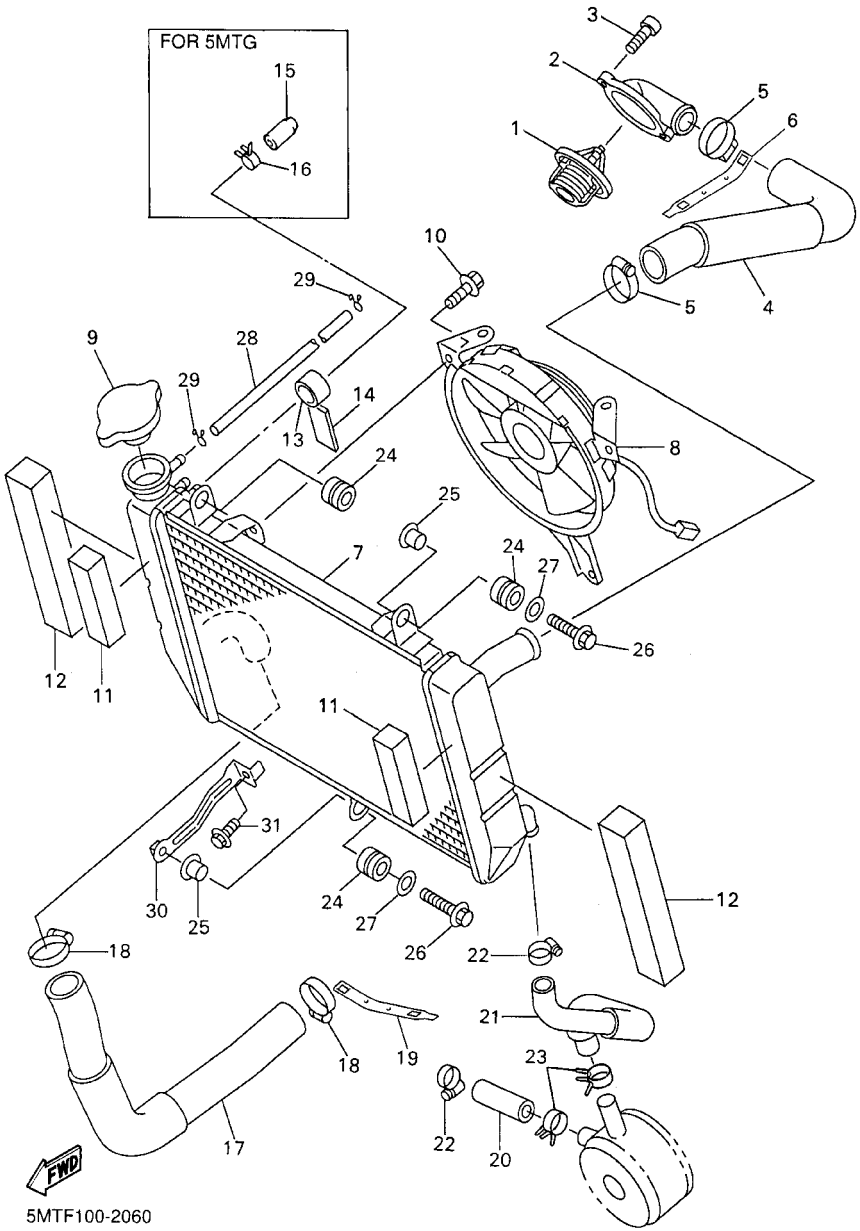

5MTF100-2060

FIG. 6 RADIATOR. HOSE

REF. NO.	PART NO.	DESCRIPTION	5MTF	5MTG	5MTH			REMARKS
27	90201–06071	WASHER, PLATE	2	2	2			
28	90445–087K6	HOSE (L700)	1	1	1			
29	90467–08075	CLIP	2	2	2			
30	5EB–1244E–00	BRACKET 1	1	1	1			
31	95827–06012	BOLT, FLANGE	1	1	1			

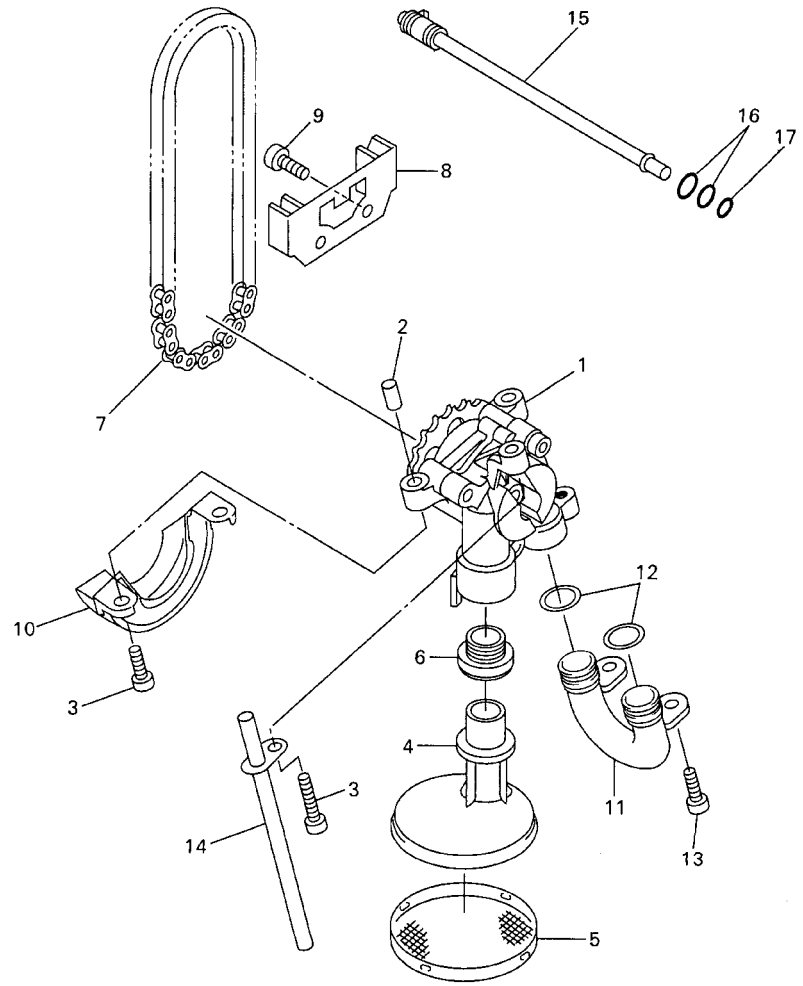

5MT3351-1070

FIG. 7 OIL PUMP

REF. NO.	PART NO.	DESCRIPTION	5MTF	5MTG	5MTH			REMARKS
1	5MT–13300–00	OIL PUMP ASSY	1	1	1			
2	99530–08012	PIN, DOWEL	2	2	2			
3	91317–06030	BOLT	3	3	3			
4	5EB–13412–00	HOUSING, STRAINER	1	1	1			
5	5EB–13411–00	STRAINER, OIL	1	1	1			
6	5EB–13415–00	SEAL, OIL STRAINER	1	1	1			
7	94580–25080	CHAIN	1	1	1			
8	5EB–13898–00	HOLDER	1	1	1			
9	90110–06001	BOLT, HEXAGON SOCKET HEAD	2	2	2			
10	5MT–13327–00	COVER, PUMP GEAR	1	1	1			
11	5MT–13416–00	PIPE, OIL 1	1	1	1			
12	93210–14579	O–RING	2	2	2			
13	90110–06226	BOLT, HEXAGON SOCKET HEAD	2	2	2			
14	5EB–13161–00	PIPE, DELIVERY 1	1	1	1			
15	5EB–1316E–00	PIPE, DELEVERY 5	1	1	1			
16	93210–09165	O–RING	2	2	2			
17	93210–06667	O–RING	1	1	1			

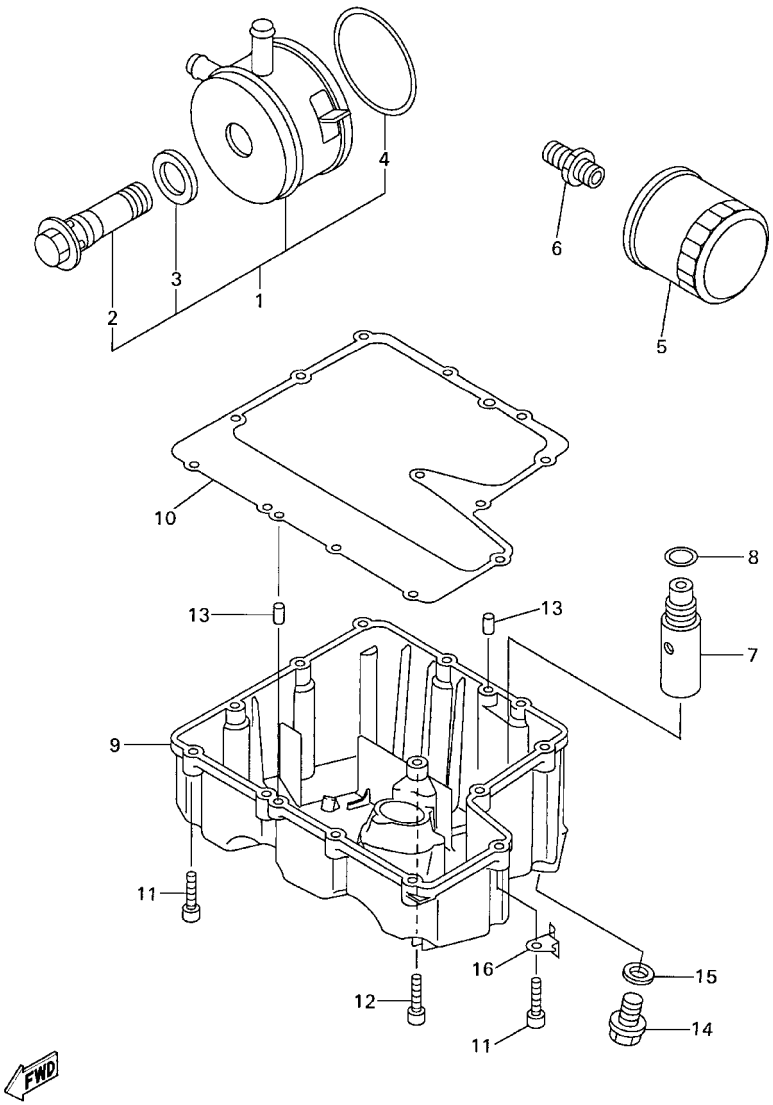

5EB3351-9080

FIG. 8 OIL CLEANER

REF. NO.	PART NO.	DESCRIPTION	5MTF	5MTG	5MTH			REMARKS
1	5EB–13470–00	OIL COOLER ASSY	1	1	1			
2	5EB–12822–00	.BOLT, UNION	1	1	1			
3	5EB–13475–00	.GASKET	1	1	1			
4	4JH–13473–00	.O–RING	1	1	1			
5	5GH–13440–00	ELEMENT ASSY, OIL CLEANER	1	1	1			
6	90401–20145	BOLT, UNION	1	1	1			
7	3KS–13490–00	RELIEF VALVE ASSY	1	1	1			
8	93210–15566	O–RING	1	1	1			
9	5EB–13417–00	COVER, STRAINER	1	1	1			
10	5EB–13414–00	GASKET, STRAINER COVER	1	1	1			
11	91317–06025	BOLT	12	12	12			
12	90110–06225	BOLT, HEXAGON SOCKET HEAD	1	1	1			
13	91808–17032	PIN, DOWEL	2	2	2			
14	90340–14132	PLUG, STRAIGHT SCREW	1	1	1			
15	214–11198–01	GASKET	1	1	1			
16	90465–10020	CLAMP	1	1	1			

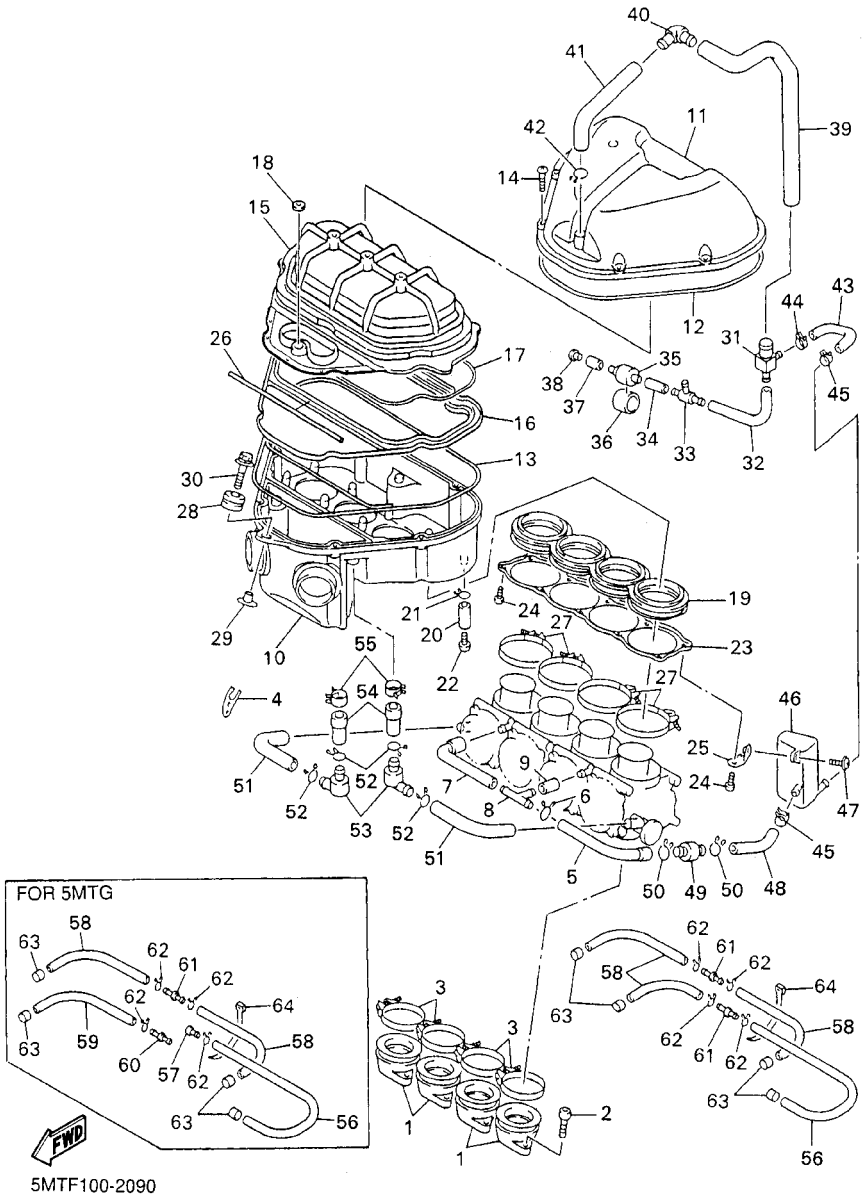

FIG. 9 INTAKE

REF. NO.	PART NO.	DESCRIPTION	5MTF	5MTG	5MTH			REMARKS
1	5EB–13586–00	JOINT, CARBURETOR 1	4	4	4			
2	91317–06020	BOLT	8	8	8			
3	90450–54093	HOSE CLAMP ASSY	4	4	4			
4	5EB–14413–00	STAY	1	1	1			
5	5EB–14349–00	PIPE	1	1	1			
6	90467–15197	CLIP	1	1	1			
7	5EB–14348–00	PIPE 1	1	1	1			
8	90413–10016	WAY 3	1	1	1			
9	90445–11795	HOSE (L30)	1	1	1			
10	5EB–14411–01	CASE, AIR CLEANER 1	1		1			
	5GV–14411–00	CASE, AIR CLEANER 1		1				
11	5EB–14421–00	CASE, AIR CLEANER 2	1	1	1			
12	5EB–14452–00	SEAL	1	1	1			
13	5EB–14462–00	SEAL	1	1	1			
14	98507–05025	SCREW, PAN HEAD	6	6	6			
15	5EB–14450–01	ELEMENT ASSY, AIR CLEANER	1	1	1			
16	5EB–1441F–01	PARTITION, AIR CLEANER CASE	1	1	1			
17	5EB–14457–00	SEAL	1	1	1			
18	5EB–1446R–10	SEAL	1	1	1			
19	5EB–14453–00	JOINT, AIR CLEANER 1	1	1	1			
20	90445–11795	HOSE (L30)	1	1	1			
21	90467–10041	CLIP	1	1	1			
22	90338–08174	PLUG	1	1	1			
23	5EB–14477–00	PLATE	1	1	1			
24	97707–50120	SCREW, TAPPING	10	10	10			
25	5EB–1441L–00	PANEL 1	1	1	1			
26	5EB–14467–00	SEAL	1	1	1			

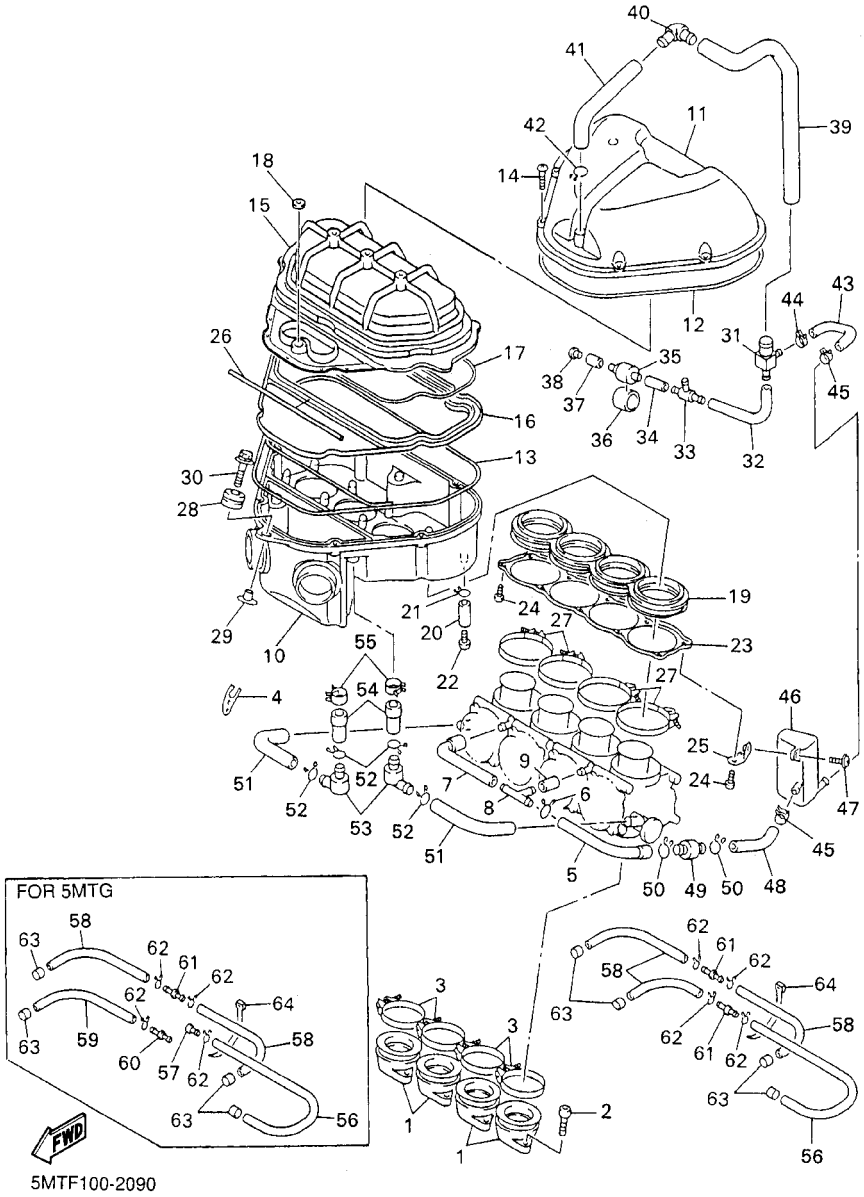

FIG. 9 INTAKE

REF. NO.	PART NO.	DESCRIPTION	5MTF	5MTG	5MTH			REMARKS
27	90450–68094	HOSE CLAMP ASSY	4	4	4			
28	90480–12314	GROMMET	1	1	1			
29	90387–065J6	COLLAR	1	1	1			
30	90119–06172	BOLT, WITH WASHER	1	1	1			
31	90413–18033	WAY 3	1	1	1			
32	4TV–14348–00	PIPE 1	1	1	1			
33	90413–09032	WAY 3	1	1	1			
34	90445–11147	HOSE (L50)	1	1	1			
35	4TV–14226–00	CUP, DRAIN	1	1	1			
36	90445–307K7	HOSE (L35)	1	1	1			
37	90445–11262	HOSE (L30)	1	1	1			
38	90338–08174	PLUG	1	1	1			
39	5EB–14197–00	PIPE	1	1	1			
40	5EB–14485–00	PIPE, JOINT	1	1	1			
41	5EB–14466–00	PIPE	1	1	1			
42	90467–20030	CLIP	1	1	1			
43	5EB–14419–01	PIPE	1	1	1			
44	90467–16098	CLIP	1	1	1			
45	90467–15054	CLIP	2	2	2			
46	5EB–13581–01	CHAMBER, AIR	1	1	1			
47	90159–05028	SCREW, WITH WASHER	1	1	1			
48	5EB–1444J–01	PIPE	1	1	1			
49	4X7–14467–01	SEAL	1	1	1			
50	90467–15197	CLIP	2	2	2			
51	5EB–1443J–00	PIPE	2	2	2			
52	90467–15012	CLIP	4	4	4			
53	3LN–24515–00	NET, FILTER 2	2	2	2			

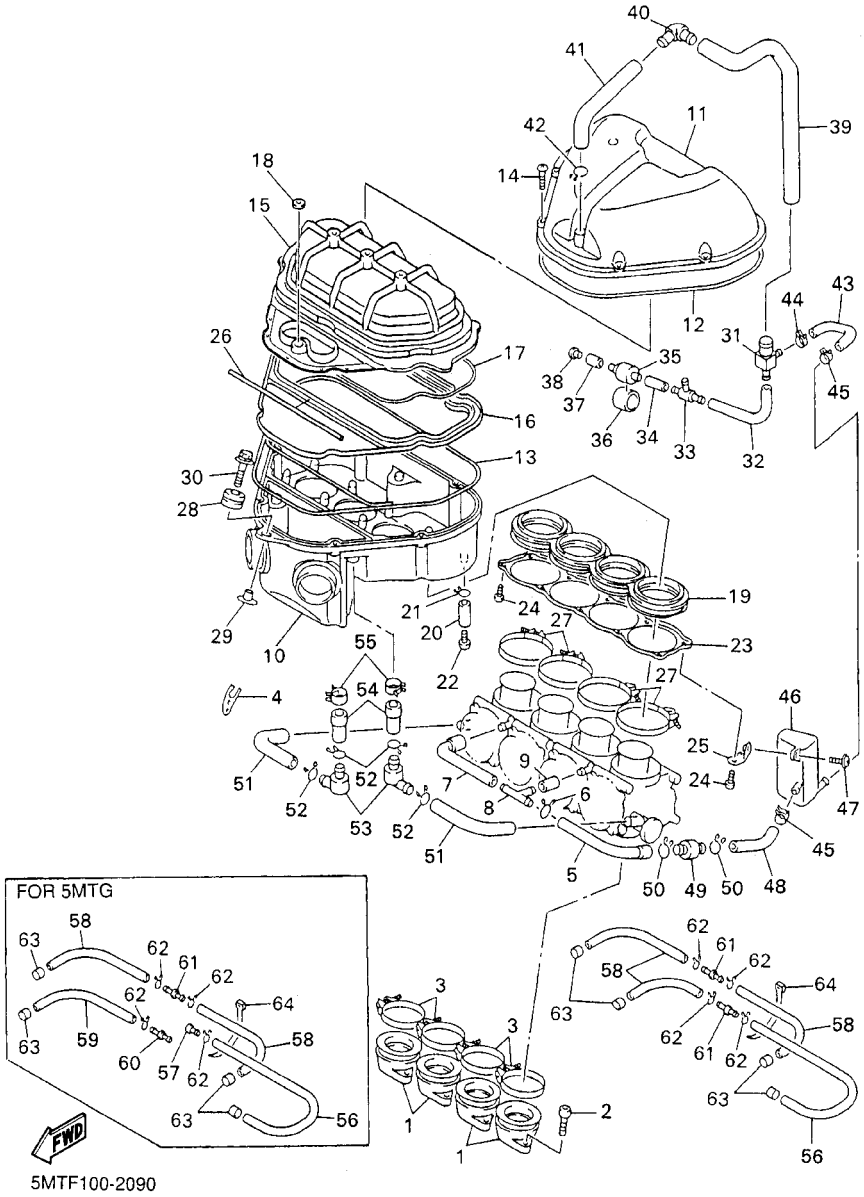

FIG. 9 INTAKE

REF. NO.	PART NO.	DESCRIPTION	5MTF	5MTG	5MTH			REMARKS
54	5EB–14148–00	PIPE	2	2	2			
55	90467–17128	CLIP	2	2	2			
56	90445–09500	HOSE (L275)	1		1			
	90445–097H2	HOSE (L340)		1				
57	90338–05194	PLUG		1				
58	90445–09541	HOSE (L130)	3		3			
	90445–09541	HOSE (L130)		2				
59	90445–09488	HOSE (L170)		1				
60	4MM–13582–00	PIPE		1				
61	90338–05271	PLUG	2		2			
	90338–05271	PLUG		1				
62	90467–08017	CLIP	4	4	4			
63	90467–09037	CLIP	4	4	4			
64	90464–13073	CLAMP	1	1	1			

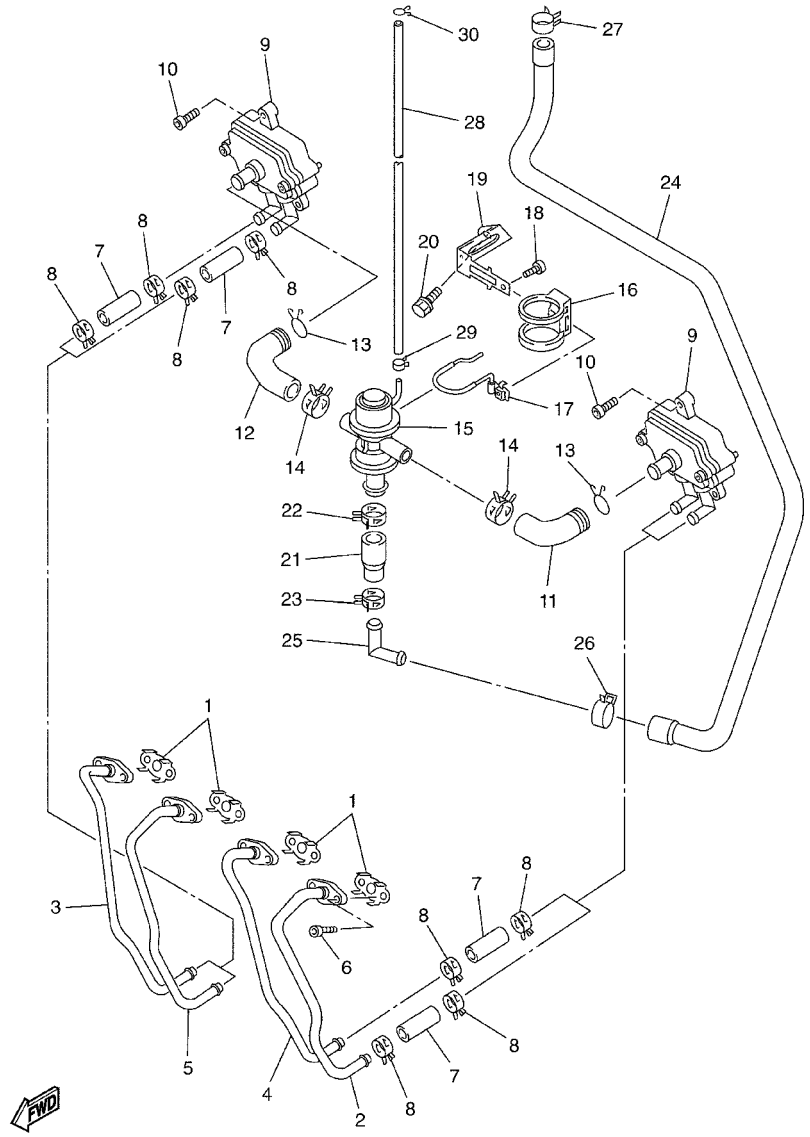

5GV3100-9100

FIG. 10 AIR INDUCTION SYSTEM

REF. NO.	PART NO.	DESCRIPTION	5MTF	5MTG	5MTH			REMARKS
1	5GV–14815–00	GASKET		4				
2	5GV–14871–00	PIPE 1		1				
3	5GV–14873–00	PIPE 3		1				
4	5GV–14874–00	PIPE 4		1				
5	5GV–14875–00	PIPE 5		1				
6	91380–06016	BOLT		8				
7	5GV–14881–00	HOSE, BEND 1		4				
8	90467–15054	CLIP		8				
9	5GV–14808–00	REED VALVE ASSY		2				
10	91317–06020	BOLT		6				
11	5GV–14882–00	HOSE, BEND 2		1				
12	5GV–14883–00	HOSE, BEND 3		1				
13	90467–16195	CLIP		2				
14	90467–21068	CLIP		2				
15	5GV–14840–00	AIR CUT VALVE ASS'Y		1				
16	5GV–14844–00	DAMPER		1				
17	5GV–14849–00	BRACKET		1				
18	98507–06010	SCREW, PAN HEAD		1				
19	5GV–14834–00	STAY		1				
20	95807–08014	BOLT, FLANGE		1				
21	4MM–14885–00	HOSE, BEND 5		1				
22	90467–23067	CLIP		1				
23	90467–19051	CLIP		1				
24	5GV–14884–00	HOSE, BEND 4		1				
25	5GV–14872–00	PIPE 2		1				
26	90467–19051	CLIP		1				
27	90467–17128	CLIP		1				

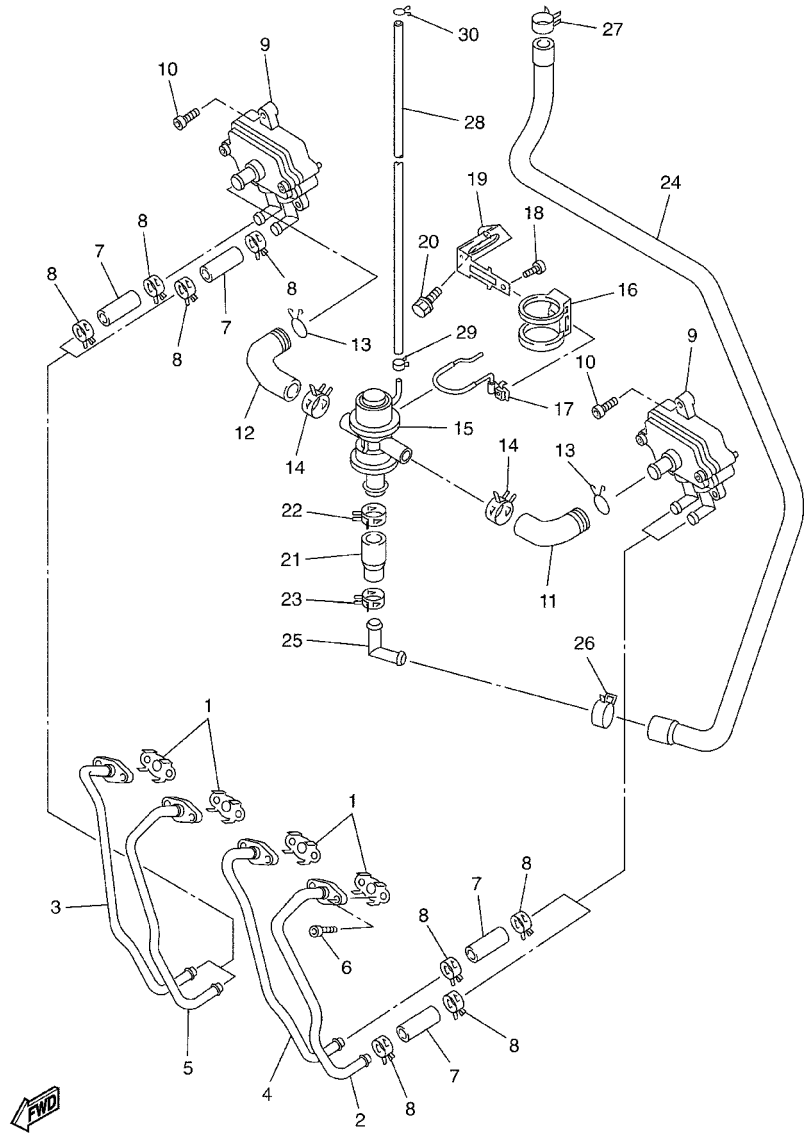

FIG. 10 AIR INDUCTION SYSTEM

REF. NO.	PART NO.	DESCRIPTION	5MTF	5MTG	5MTH			REMARKS
28	90445–097E9	HOSE (L550)		1				
29	90467–08092	CLIP		1				
30	90467–08017	CLIP		1				

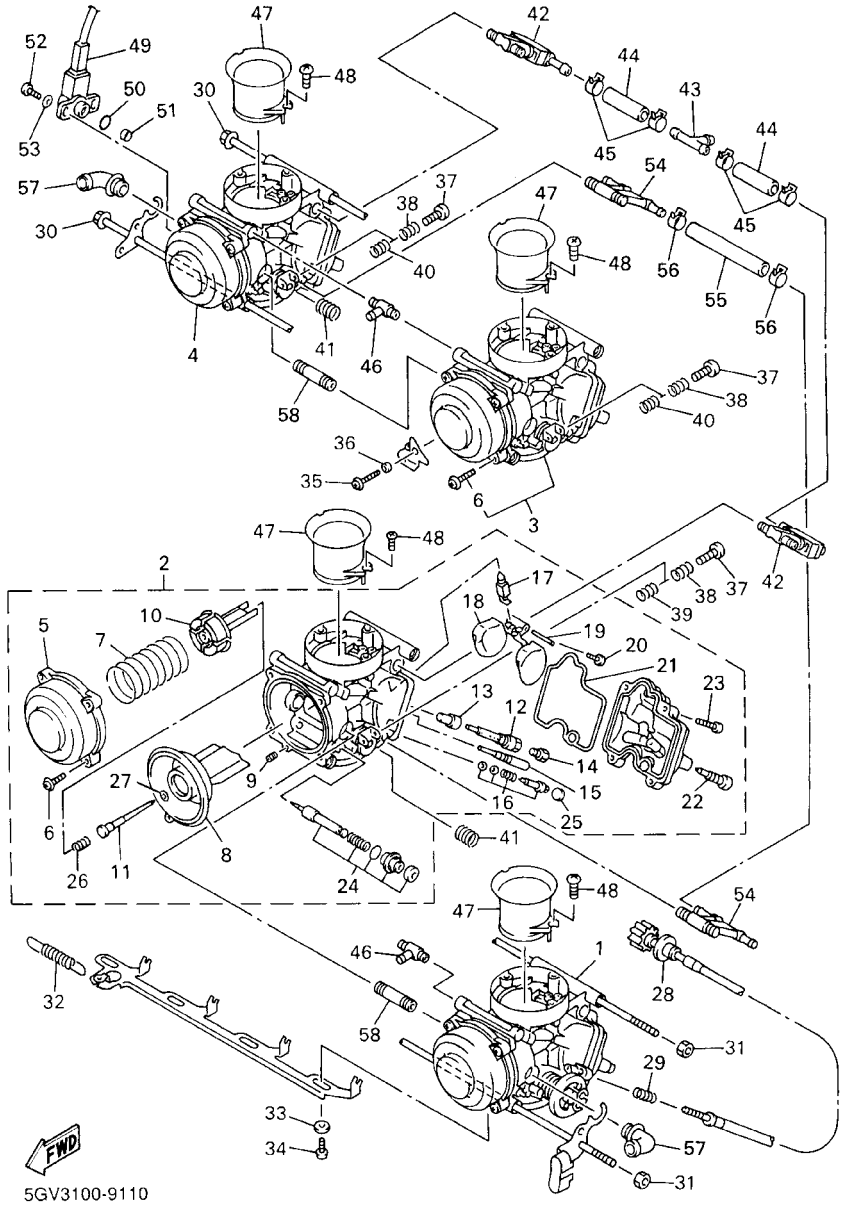

FIG. 11 CARBURETOR

REF. NO.	PART NO.	DESCRIPTION	5MTF	5MTG	5MTH			REMARKS
1	5GV–14901–01	CARBURETOR ASSY 1	1					
	5GV–14901–10	CARBURETOR ASSY 1		1				
2	5GV–14902–01	CARBURETOR ASSY 2	1					
	5GV–14902–10	CARBURETOR ASSY 2		1				
3	5GV–14903–01	CARBURETOR ASSY 3	1					
	5GV–14903–10	CARBURETOR ASSY 3		1				
4	5GV–14904–01	CARBURETOR ASSY 4	1					
	5GV–14904–10	CARBURETOR ASSY 4		1				
5	5EB–14958–00	.COVER, DIAPHRAGM	1	1				
6	4JH–14216–00	.SCREW	3	3				UR #3
	4JH–14216–00	.SCREW	4	4				UR #1,2,4
7	5EB–14933–00	.SPRING, DIAPHRAGM	1	1				
8	5EB–14940–00	.DIAPHRAGM ASSY	1					
	5GV–14940–00	.DIAPHRAGM ASSY		1				
9	4JH–14515–00	.JET	1	1				
10	5EB–14936–00	.SEAT, SPRING	1					
	5GV–14936–00	.SEAT, SPRING		1				
11	5GV–14916–00	.NEEDLE (N7SB)	1					UR #1,4
	5EB–14916–10	.NEEDLE (N7SA)	1					UR #2,3
	5GV–14916–10	.NEEDLE (N7SD)		1				UR #1,4
	5GV–14916–20	.NEEDLE (N7SE)		1				UR #2,3
12	5EB–1414G–00	.PIPE, MAIN BREED	1	1				
13	5EB–14244–00	.HOLDER, NOZZLE	1	1				
14	3TJ–14943–88	.JET, MAIN (#152)	1					UR #1,4
	3TJ–14943–87	.JET, MAIN (#148)	1					UR #2,3
	3TJ–14943–87	.JET, MAIN (#148)		1				
15	5EB–14948–02	.JET (#38)	1					

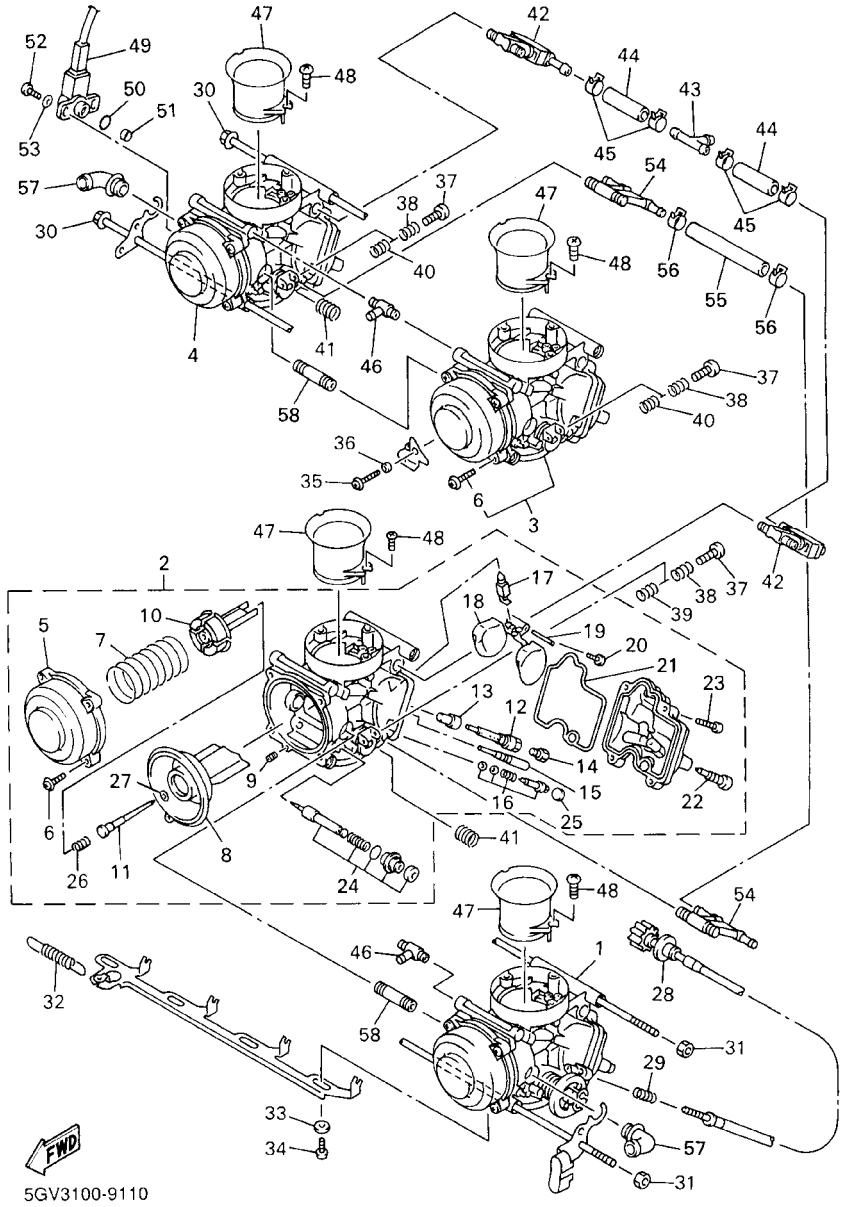

FIG. 11 CARBURETOR

REF. NO.	PART NO.	DESCRIPTION	5MTF	5MTG	5MTH			REMARKS
15	5EB–14948–01	.JET (#35)		1				
16	5EB–14105–00	.PILOT SCREW SET	1					
	5GV–14105–00	.PILOT SCREW SET		1				
17	5EB–14107–00	.NEEDLE VALVE SET	1	1				
18	5EB–14985–00	.FLOAT	1	1				
19	676–14548–00	.PIN, FLOAT ARM	1	1				
20	688–14592–00	.SCREW	1	1				
21	5EB–14984–00	.GASKET, FLOAT CHAMBER	1	1				
22	3TJ–14191–40	.PLUG, DRAIN	1	1				
23	98502–04014	.SCREW, PAN HEAD	4	4				
24	4YR–1410A–00	.STARTER SET	1	1				
25	4MM–14118–00	.CAP	1	1				
26	5GV–14556–00	.SPRING		1				
27	5GV–14557–00	.WASHER		1				
28	5EB–14922–00	SCREW, THROTTLE	1	1				
29	4JH–14934–00	SPRING, THROTTLE STOP	1	1				
30	5EB–14162–00	BOLT, HOLDING	2	2				
31	4JH–14358–00	NUT	2	2				
32	5EB–14935–00	SPRING	1	1				
33	90202–06056	WASHER, PLATE	6	6				
34	3TJ–14245–40	SCREW, GUIDE	3	3				
35	4JH–14565–00	SCREW	1	1				
36	4JH–14264–00	COLLAR	1	1				
37	5EB–14121–00	SCREW, THROTTLE STOP	3	3				
38	7A9–14555–00	SPRING	3	3				
39	4YR–14133–00	SPRING, THROTTLE STOP	1	1				
40	4JH–14133–00	SPRING, THROTTLE STOP	2	2				

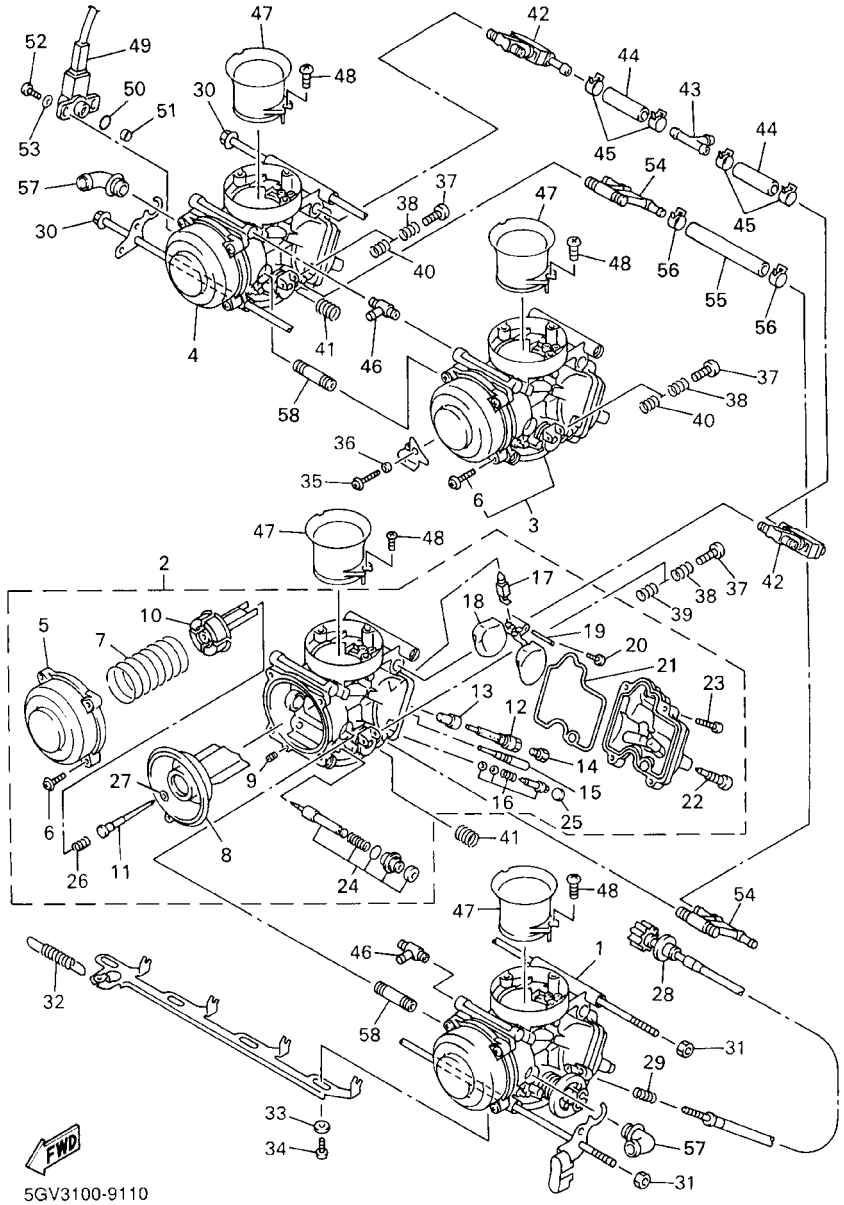

FIG. 11 CARBURETOR

REF. NO.	PART NO.	DESCRIPTION	5MTF	5MTG	5MTH			REMARKS
41	4JH–14487–00	SPRING	2	2				
42	4JH–14350–00	PIPE ADAPTOR ASSY	2	2				
43	4JH–13918–00	PIPE T	1	1				
44	5EB–14298–00	PIPE	2	2				
45	4JH–14137–00	CLIP	4	4				
46	5EB–14197–01	PIPE	2	2				
47	5EB–1440F–00	JOINT, AIR FILTER 1	4	4				
48	3TJ–14216–40	SCREW	8	8				
49	4TV–85885–00	THROTTLE POSITION SENSOR ASSY	1	1				
50	4TV–14562–00	O–RING	1	1				
51	4TV–14534–00	COLLAR	1	1				
52	4TV–14216–00	SCREW	2	2				
53	4TV–14557–00	WASHER	2	2				
54	5EB–12446–00	JOINT	2					
55	5EB–12576–00	HOSE 1	1					
56	4TV–12486–00	CLIP	2					
57	5EB–14251–00	NIPPLE	2	2				
58	5EB–14454–00	JOINT	2	2				

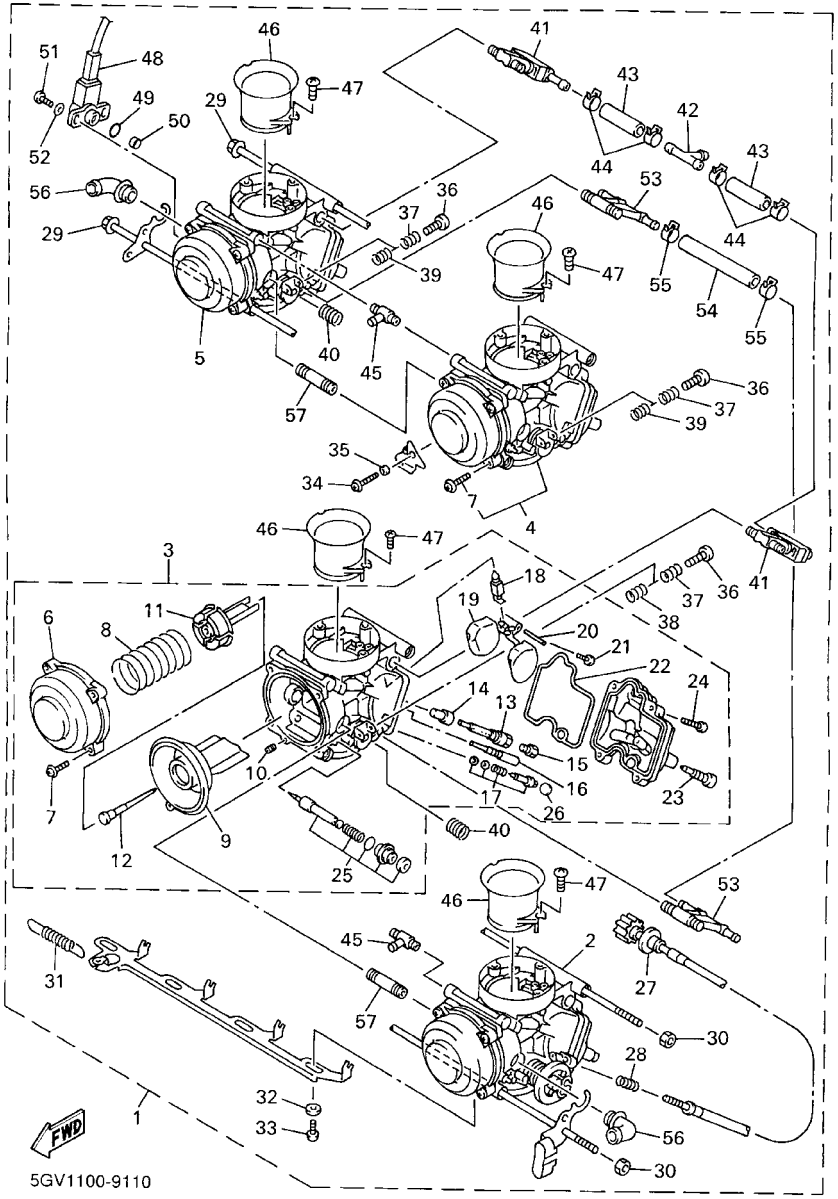

FIG. 12 CARBURETOR 2

REF. NO.	PART NO.	DESCRIPTION	5MTF	5MTG	5MTH			REMARKS
1	5GV–14900–01	CARBURETOR ASSY			1			
2	5GV–14901–01	.CARBURETOR ASSY 1			1			
3	5GV–14902–01	.CARBURETOR ASSY 2			1			
4	5GV–14903–01	.CARBURETOR ASSY 3			1			
5	5GV–14904–01	.CARBURETOR ASSY 4			1			
6	5EB–14958–00	..COVER, DIAPHRAGM			1			
7	4JH–14216–00	..SCREW			3			UR #3
	4JH–14216–00	..SCREW			4			UR #1,2,4
8	5EB–14933–00	..SPRING, DIAPHRAGM			1			
9	5EB–14940–00	..DIAPHRAGM ASSY			1			
10	4JH–14515–00	..JET			1			
11	5EB–14936–00	..SEAT, SPRING			1			
12	5GV–14916–00	..NEEDLE (N7SB)			1			UR #1,4
	5EB–14916–10	..NEEDLE (N7SA)			1			UR #2,3
13	5EB–1414G–00	..PIPE, MAIN BREED			1			
14	5EB–14244–00	..HOLDER, NOZZLE			1			
15	3TJ–14943–88	..JET, MAIN (#152)			1			UR #1,4
	3TJ–14943–87	..JET, MAIN (#148)			1			UR #2,3
16	5EB–14948–02	..JET (#38)			1			
17	5EB–14105–00	..PILOT SCREW SET			1			
18	5EB–14107–00	..NEEDLE VALVE SET			1			
19	5EB–14985–00	..FLOAT			1			
20	676–14548–00	..PIN, FLOAT ARM			1			
21	688–14592–00	..SCREW			1			
22	5EB–14984–00	..GASKET, FLOAT CHAMBER			1			
23	3TJ–14191–40	..PLUG, DRAIN			1			
24	98502–04014	..SCREW, PAN HEAD			4			

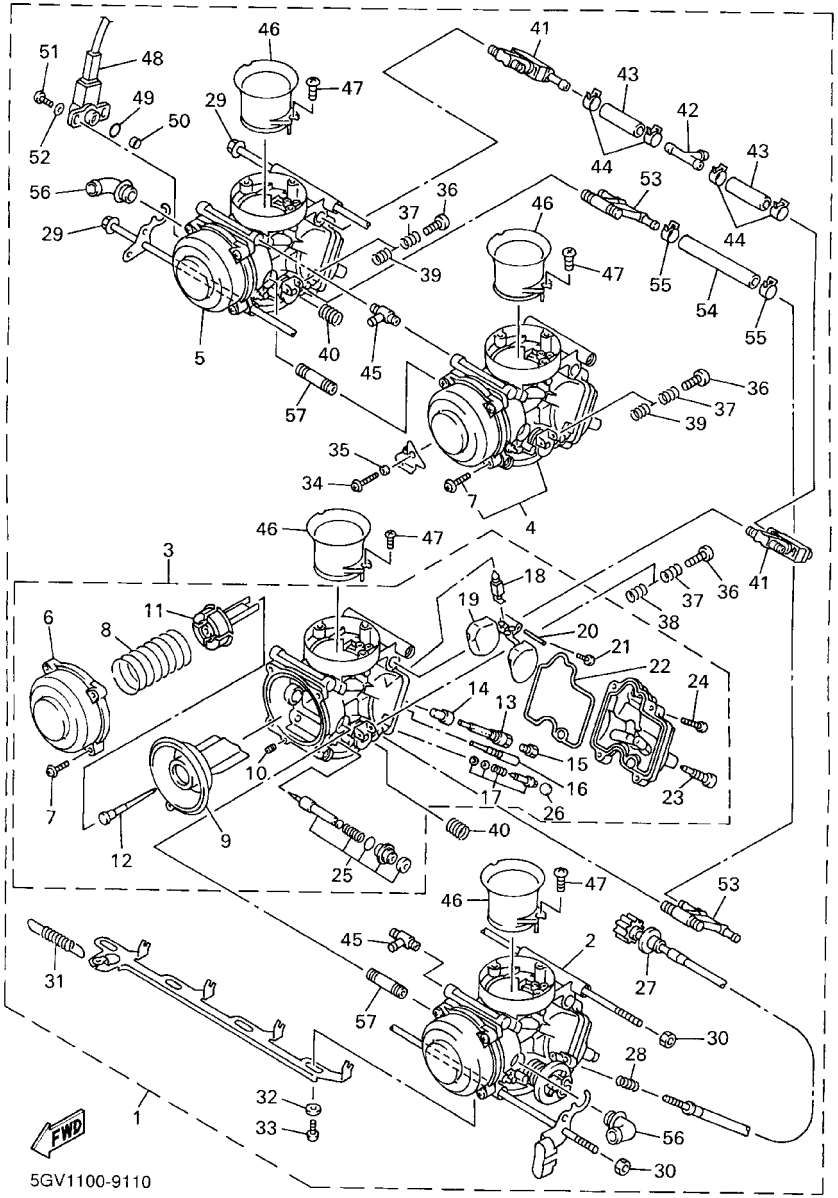

FIG. 12 CARBURETOR 2

REF. NO.	PART NO.	DESCRIPTION	5MTF	5MTG	5MTH			REMARKS
25	4YR–1410A–00	..STARTER SET			1			
26	4MM–14118–00	..CAP			1			
27	5EB–14922–00	.SCREW, THROTTLE			1			
28	4JH–14934–00	.SPRING, THROTTLE STOP			1			
29	5EB–14162–00	.BOLT, HOLDING			2			
30	4JH–14358–00	.NUT			2			
31	5EB–14935–00	.SPRING			1			
32	90202–06056	.WASHER, PLATE			6			
33	3TJ–14245–40	.SCREW, GUIDE			3			
34	4JH–14565–00	.SCREW			1			
35	4JH–14264–00	.COLLAR			1			
36	5EB–14121–00	.SCREW, THROTTLE STOP			3			
37	7A9–14555–00	.SPRING			3			
38	4YR–14133–00	.SPRING, THROTTLE STOP			1			
39	4JH–14133–00	.SPRING, THROTTLE STOP			2			
40	4JH–14487–00	.SPRING			2			
41	4JH–14350–00	.PIPE ADAPTOR ASSY			2			
42	4JH–13918–00	.PIPE T			1			
43	5EB–14298–00	.PIPE			2			
44	4JH–14137–00	.CLIP			4			
45	5EB–14197–01	.PIPE			2			
46	5EB–1440F–00	.JOINT, AIR FILTER 1			4			
47	3TJ–14216–40	.SCREW			8			
48	4TV–85885–00	.THROTTLE POSITION SENSOR ASSY			1			
49	4TV–14562–00	.O–RING			1			
50	4TV–14534–00	.COLLAR			1			
51	4TV–14216–00	.SCREW			2			

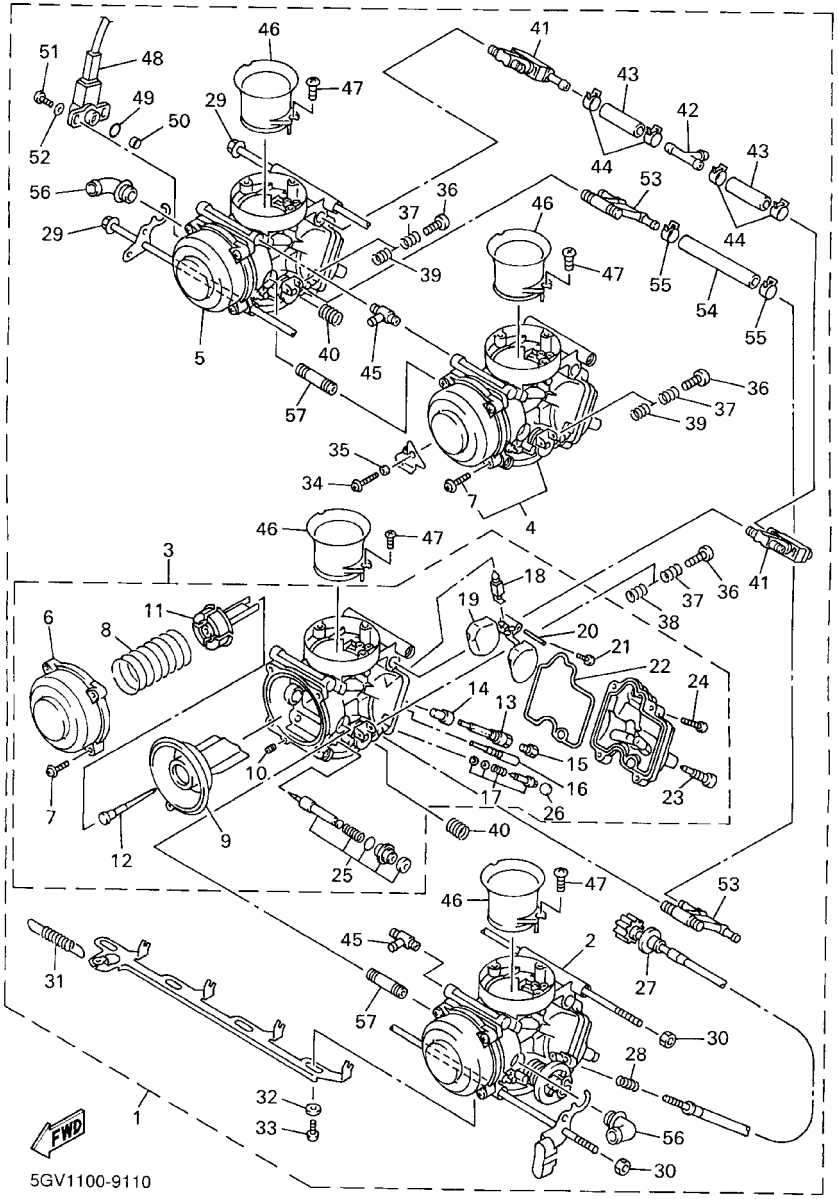

FIG. 12 CARBURETOR 2

REF. NO.	PART NO.	DESCRIPTION	5MTF	5MTG	5MTH			REMARKS
52	4TV–14557–00	.WASHER			2			
53	5EB–12446–00	.JOINT			2			
54	5EB–12576–00	.HOSE 1			1			
55	4TV–12486–00	.CLIP			2			
56	5EB–14251–00	.NIPPLE			2			
57	5EB–14454–00	.JOINT			2			

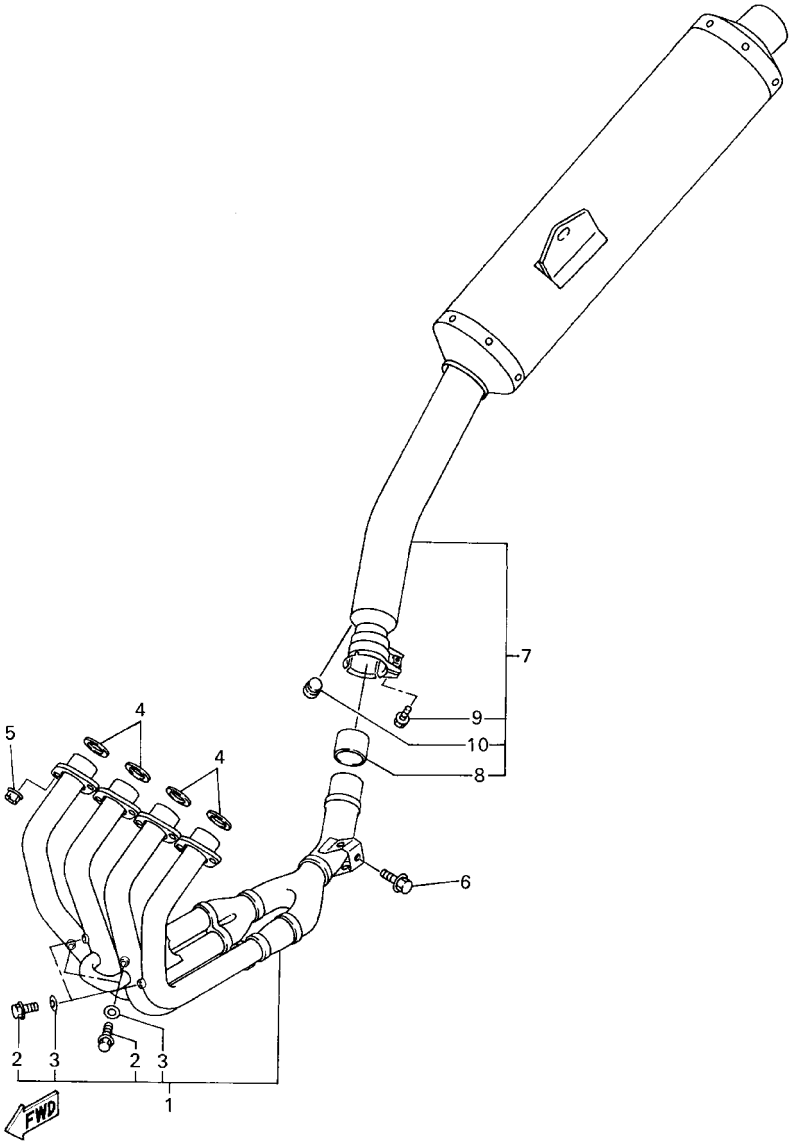

FIG. 13 EXHAUST

REF. NO.	PART NO.	DESCRIPTION	5MTF	5MTG	5MTH			REMARKS
1	5MT–14602–00	EXHAUST PIPE COMP.	1	1	1			
2	97080–06008	.BOLT	4	4	4			
3	92990–06600	.WASHER, PLATE	4	4	4			
4	3YF–14613–01	GASKET, EXHAUST PIPE	4	4	4			
5	90179–08410	NUT	8	8	8			
6	95817–08035	BOLT, FLANGE	1	1	1			
7	5GV–14710–00	MUFFLER ASSY 1	1	1	1			
8	5EB–14714–00	.GASKET, MUFFLER	1	1	1			
9	95814–08025	.BOLT, FLANGE	1	1	1			
10	4FM–24181–00	.DAMPER, LOCATING 1	1	1	1			

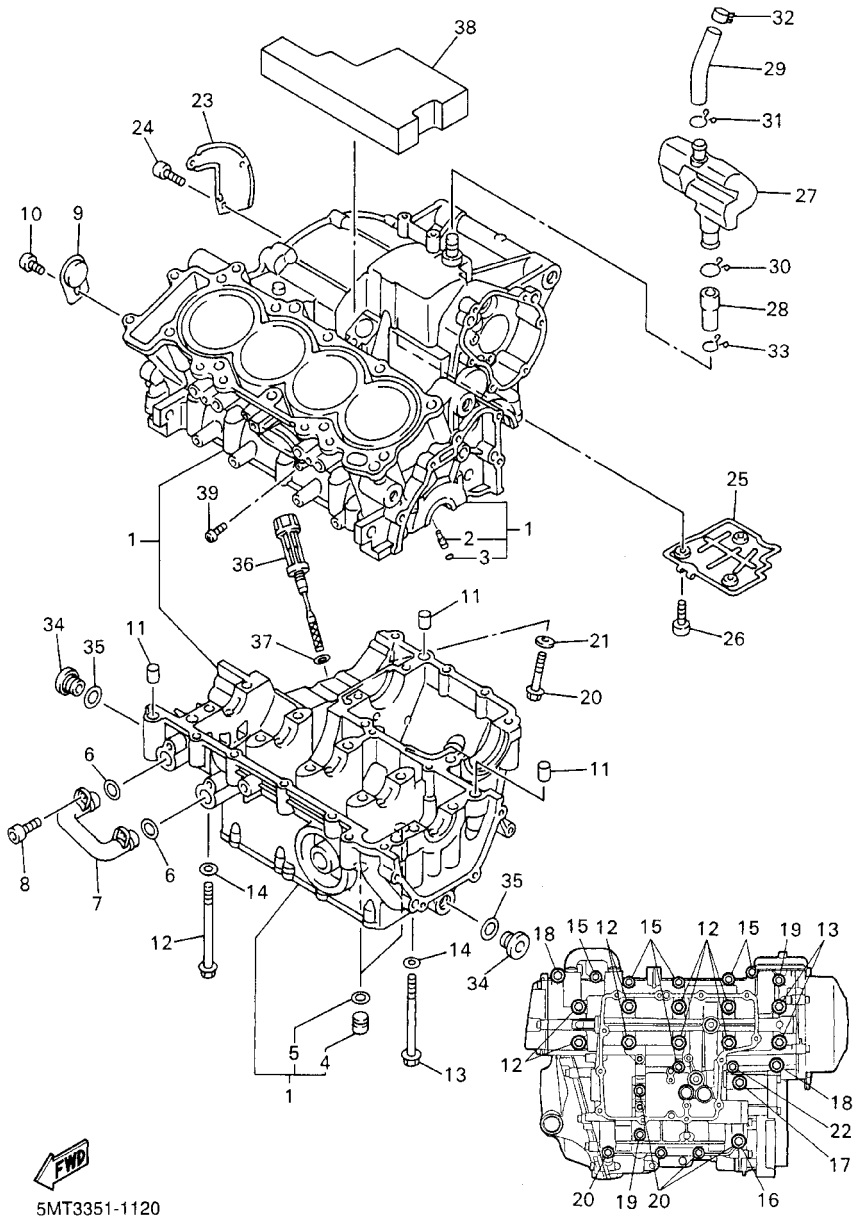

FIG. 14 CRANKCASE

REF. NO.	PART NO.	DESCRIPTION	5MTF	5MTG	5MTH			REMARKS
1	5MT–15100–01	CRANKCASE ASSY	1	1	1			
2	5EB–15155–00	.NOZZLE 3	4	4	4			
3	93210–04092	.O–RING	4	4	4			
4	90338–16262	.PLUG	2	2	2			
5	93210–12790	.O–RING	2	2	2			
6	93210–14579	O–RING	2	2	2			
7	5EB–13418–00	PIPE, OIL 2	1	1	1			
8	90110–06091	BOLT, HEXAGON SOCKET HEAD	2	2	2			
9	5EB–15189–00	PLUG	1	1	1			
10	92017–06014	BOLT, BUTTON HEAD	1	1	1			
11	99530–10014	PIN, DOWEL	3	3	3			
12	90105–087A0	BOLT, FLANGE	8	8	8			
13	90105–086A9	BOLT, FLANGE	2	2	2			
14	90201–087K3	WASHER, PLATE	10	10	10			
15	95817–06055	BOLT, FLANGE	6	6	6			
16	95817–08065	BOLT, FLANGE	1	1	1			
17	90105–08776	BOLT, FLANGE	1	1	1			
18	90109–065G3	BOLT	2	2	2			
19	95817–06065	BOLT, FLANGE	2	2	2			
20	95817–06045	BOLT, FLANGE	4	4	4			
21	90430–06014	GASKET	1	1	1			
22	90105–06006	BOLT, FLANGE	1	1	1			
23	5EB–11165–01	PLATE, BREATHER	1	1	1			
24	90149–06001	SCREW	3	3	3			
25	5EB–11145–00	PLATE, BREATHER 2	1	1	1			
26	90110–06226	BOLT, HEXAGON SOCKET HEAD	3	3	3			
27	5EB–15371–00	BREATHER	1	1	1			

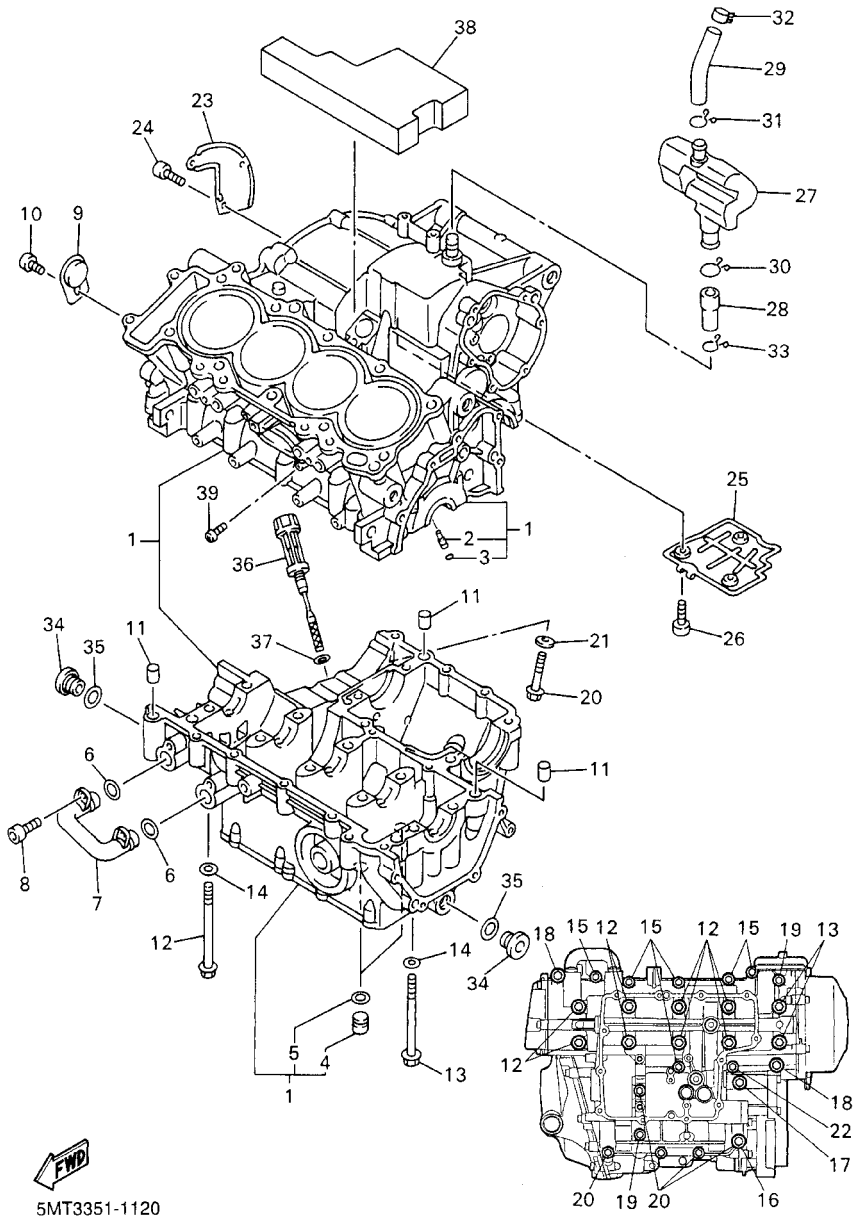

FIG. 14 CRANKCASE

REF. NO.	PART NO.	DESCRIPTION	5MTF	5MTG	5MTH			REMARKS
28	5EB–15393–00	PIPE, BREATHER 2	1	1	1			
29	5EB–15373–00	PIPE, BREATHER	1	1	1			
30	90467–18196	CLIP	1	1	1			
31	90467–16195	CLIP	1	1	1			
32	90467–15054	CLIP	1	1	1			
33	90467–14015	CLIP	1	1	1			
34	36Y–15189–00	PLUG	2	2	2			
35	93210–16325	O–RING	2	2	2			
36	5EB–15362–00	PLUG, OIL LEVEL	1	1	1			
37	93210–09165	O–RING	1	1	1			
38	5EB–15316–00	DAMPER, ENGINE MOUNT 1	1	1	1			
39	98907–06012	SCREW, BIND	1		1			

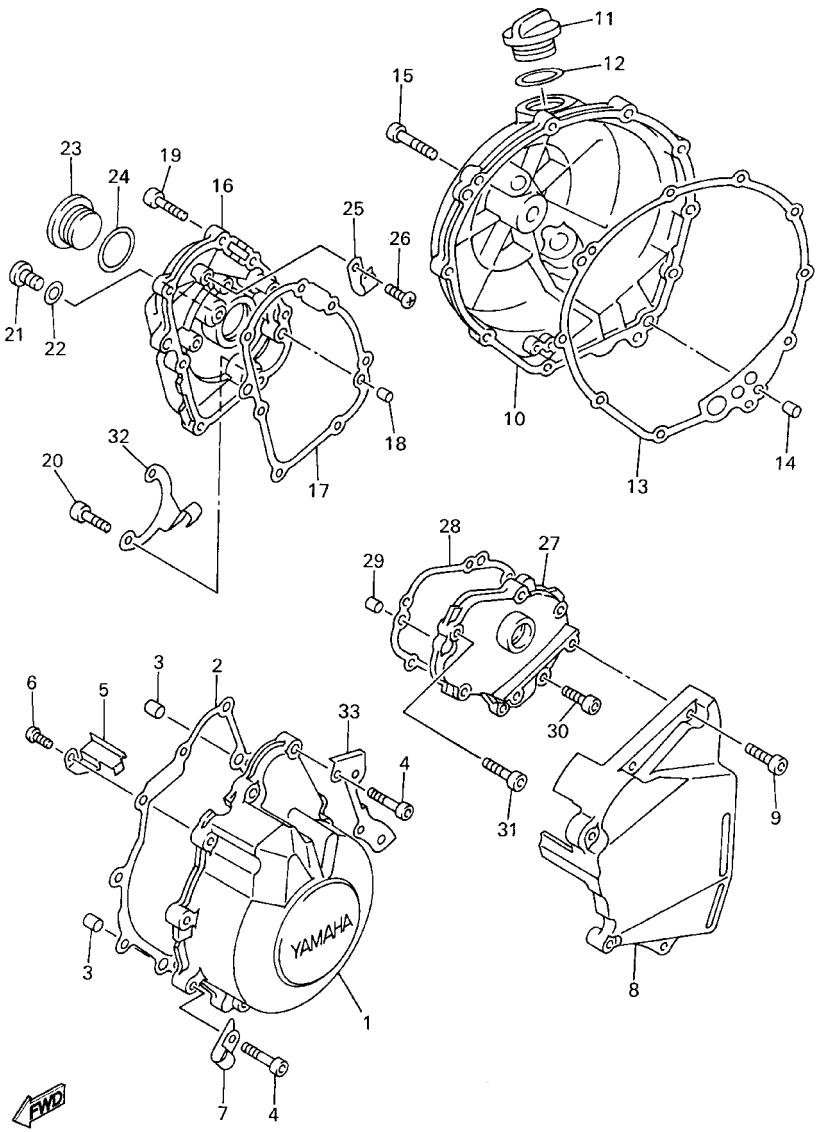

FIG. 15 CRANKCASE COVER 1

REF. NO.	PART NO.	DESCRIPTION	5MTF	5MTG	5MTH			REMARKS
1	5EB–15411–00	COVER, CRANKCASE 1	1	1	1			
2	5EB–15451–00	GASKET, CRANKCASE COVER 1	1	1	1			
3	99530–08012	PIN, DOWEL	2	2	2			
4	91314–06025	BOLT	9	9	9			
5	5EB–15484–00	CLAMP 2	1	1	1			
6	98507–06008	SCREW, PAN HEAD	1	1	1			
7	90461–10004	CLAMP	1	1	1			
8	5EB–15418–00	COVER, CHAIN CASE	1	1	1			
9	91314–06025	BOLT	5	5	5			
10	5EB–15421–01	COVER, CRANKCASE 2	1	1	1			
11	3F9–15362–00	PLUG, OIL LEVEL	1	1	1			
12	93210–27194	O–RING	1	1	1			
13	5EB–15461–00	GASKET, CRANKCASE COVER 2	1	1	1			
14	93608–17263	PIN, DOWEL	2	2	2			
15	91314–06025	BOLT	10	10	10			
16	5EB–15416–00	COVER, OIL PUMP	1	1	1			
17	5EB–15456–00	GASKET, OIL PUMP COVER 1	1	1	1			
18	99530–08012	PIN, DOWEL	2	2	2			
19	91314–06020	BOLT	5	5	5			
20	91314–06025	BOLT	2	2	2			
21	92014–08012	BOLT, BUTTON HEAD	1	1	1			
22	90430–08143	GASKET	1	1	1			
23	90340–32116	PLUG, STRAIGHT SCREW	1	1	1			
24	93210–32172	O–RING	1	1	1			
25	90462–10182	CLAMP	1	1	1			
26	98507–06008	SCREW, PAN HEAD	1	1	1			
27	5EB–15425–00	COVER,2	1	1	1			

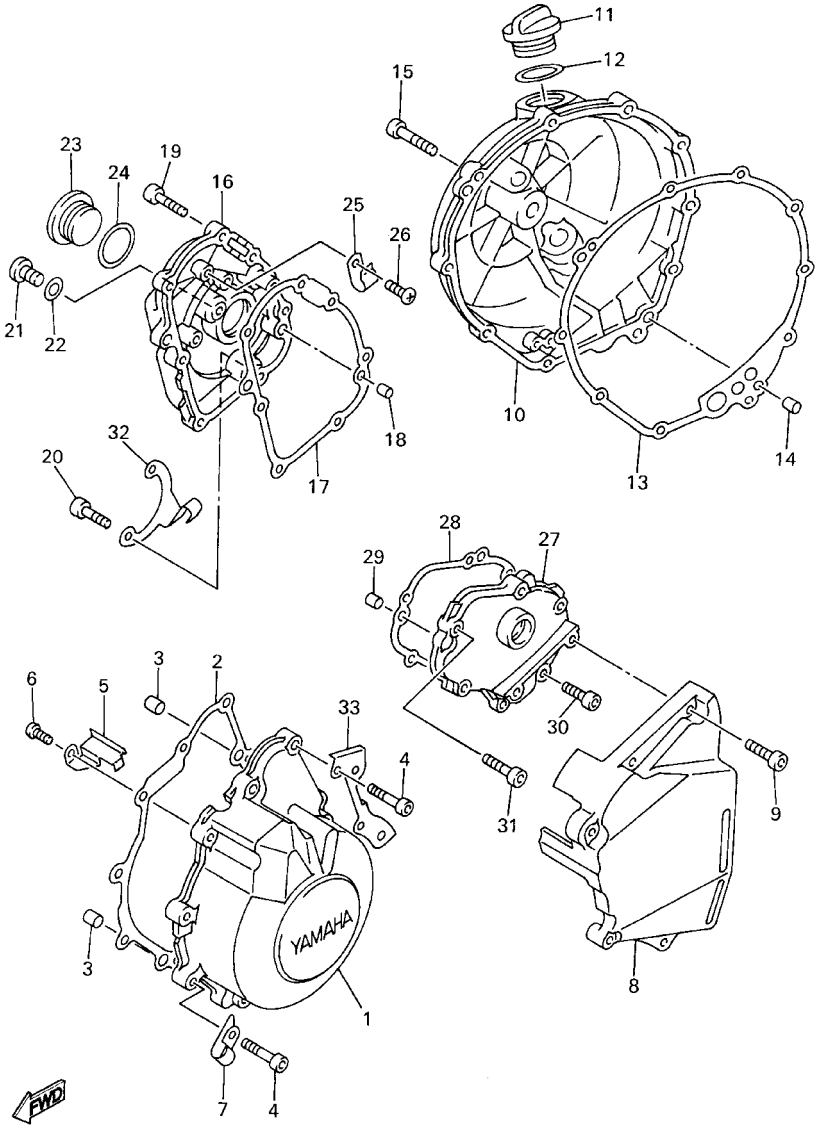

FIG. 15 CRANKCASE COVER 1

REF. NO.	PART NO.	DESCRIPTION	5MTF	5MTG	5MTH			REMARKS
28	5EB–15463–00	GASKET, COVER 2	1	1	1			
29	99530–08012	PIN, DOWEL	2	2	2			
30	91314–06018	BOLT	2	2	2			
31	91314–06025	BOLT	4	4	4			
32	5EB–15441–00	HOLDER, CLUTCH CABLE	1	1	1			
33	5EB–1541A–00	STAY,CRANKCASECOVER 1	1	1	1			

FIG. 16 STARTER

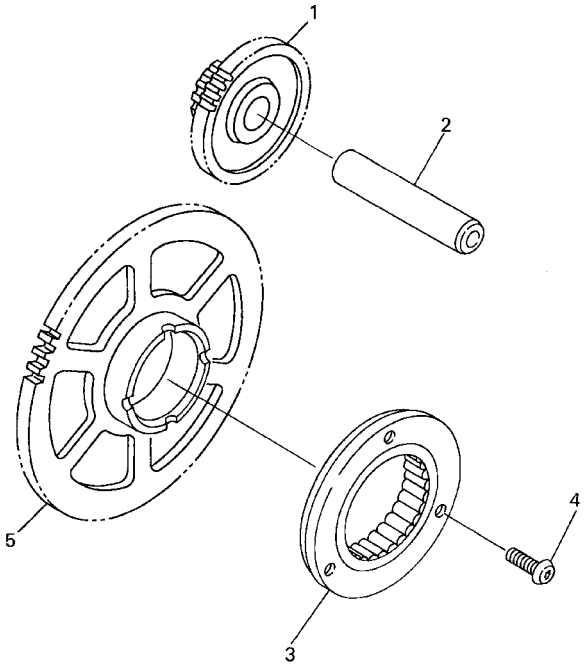

5EB3351-9140

REF. NO.	PART NO.	DESCRIPTION	5MTF	5MTG	5MTH			REMARKS
1	5EB–15512–00	GEAR, IDLER 1	1	1	1			
2	5MT–15521–00	SHAFT 1	1	1	1			
3	5MT–15590–00	STARTER ONE–WAY ASSY	1	1	1			
4	90149–08329	SCREW	3	3	3			
5	5MT–15515–00	GEAR 3	1	1	1			

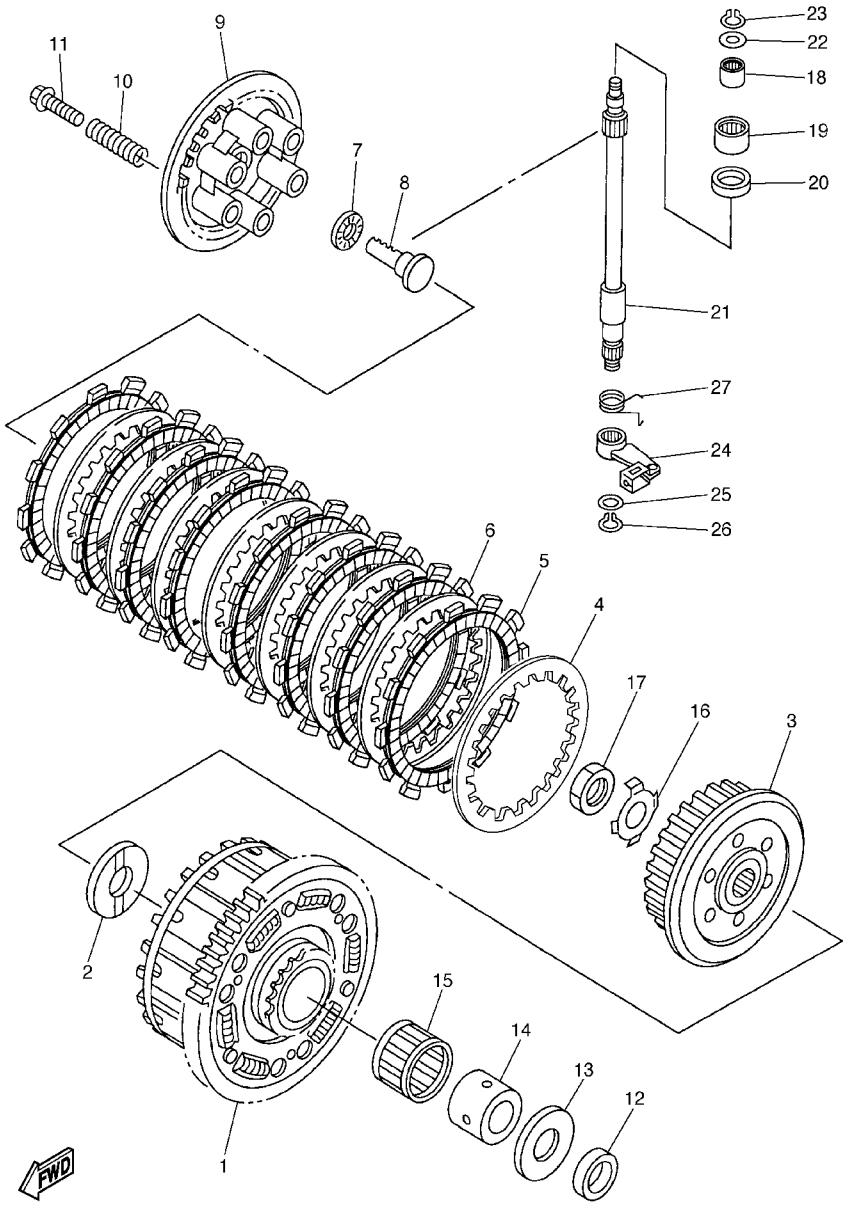

FIG. 17 CLUTCH

REF. NO.	PART NO.	DESCRIPTION	5MTF	5MTG	5MTH			REMARKS
1	5EB–16150–01	PRIMARY DRIVEN GEAR COMP.	1	1	1			
2	5EB–16154–00	PLATE, THRUST 1	1	1	1			
3	5EB–16371–10	BOSS, CLUTCH	1	1	1			
4	168–16324–00	PLATE, CLUTCH 1 (T2.3)	1	1	1			
5	4FN–16321–00	PLATE, FRICTION	8	8	8			
6	3J2–16324–00	PLATE, CLUTCH 1	7	7	7			
7	93306–00304	BEARING (B6003C4)	1	1	1			
8	5EB–16356–01	ROD, PUSH 1	1	1	1			
9	5EB–16351–01	PLATE, PRESSURE 1	1	1	1			
10	90501–225A9	SPRING, COMPRESSION	6	6	6			
11	90159–06002	SCREW, WITH WASHER	6	6	6			
12	90201–255A6	WASHER, PLATE	1	1	1			
13	1AE–16164–00	PLATE, THRUST 2	1	1	1			
14	90560–25270	SPACER	1	1	1			
15	93310–340N8	BEARING	1	1	1			
16	90215–20231	WASHER, LOCK	1	1	1			
17	90170–20327	NUT	1	1	1			
18	93317–11020	BEARING	1	1	1			
19	93315–31502	BEARING	1	1	1			
20	93102–15212	OIL SEAL	1	1	1			
21	5EB–16382–00	AXLE, PUSH LEVER	1	1	1			
22	92907–08600	WASHER, PLATE	1	1	1			
23	99001–07600	CIRCLIP	1	1	1			
24	5EB–16340–00	PUSH LEVER ASSY	1	1	1			
25	90201–10614	WASHER, PLATE	1	1	1			
26	99001–09600	CIRCLIP	1	1	1			
27	90508–165B1	SPRING, TORSION	1	1	1			

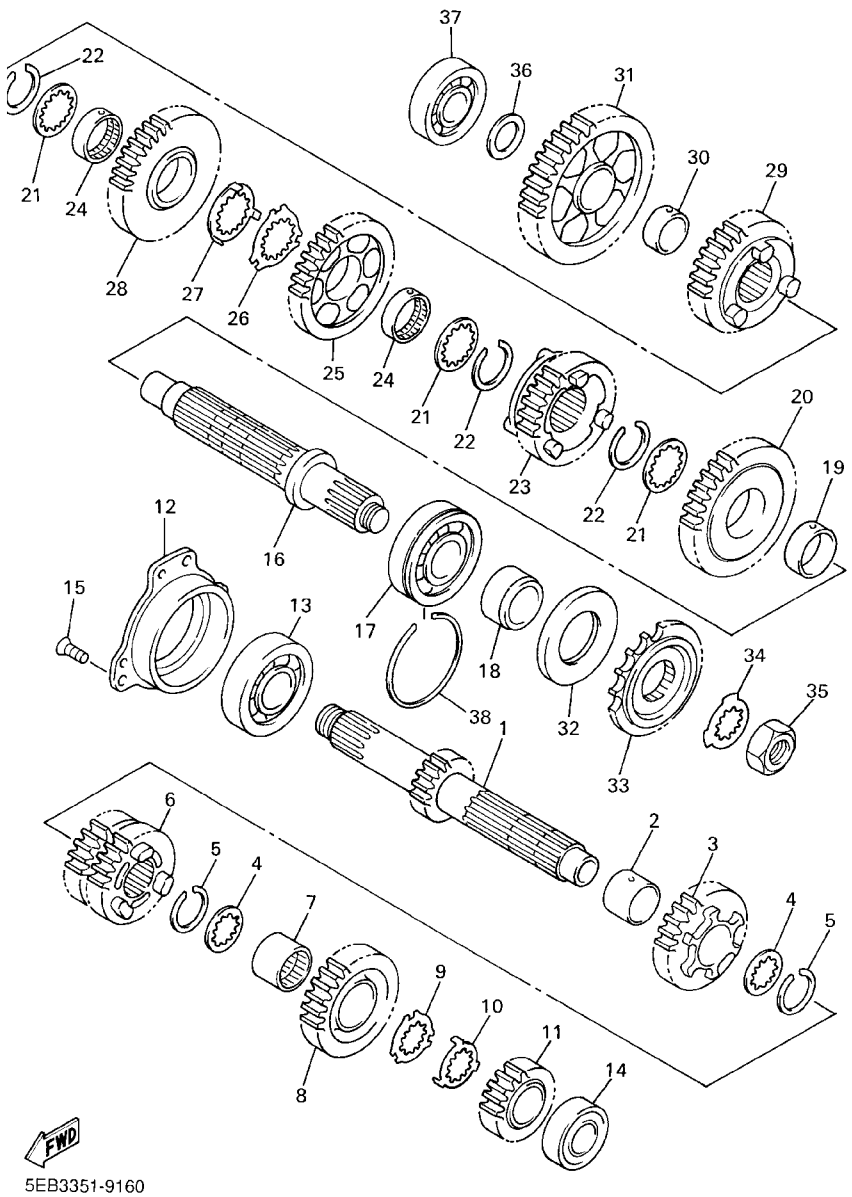

FIG. 18 TRANSMISSION

REF. NO.	PART NO.	DESCRIPTION	5MTF	5MTG	5MTH			REMARKS
1	5EB–17411–00	AXLE, MAIN (13T)	1	1	1			
2	90387–253M6	COLLAR	1	1	1			
3	5MT–17151–00	GEAR, 5TH PINION (21T)	1	1	1			
4	90209–21332	WASHER	2	2	2			
5	93440–25084	CIRCLIP	2	2	2			
6	5EB–17131–00	GEAR, 3RD/4TH PINION (18T/24T)	1	1	1			
7	90387–2513E	COLLAR	1	1	1			
8	5EB–17161–00	GEAR, 6TH PINION (24T)	1	1	1			
9	90209–22352	WASHER	1	1	1			
10	90209–21351	WASHER	1	1	1			
11	5EB–17121–00	GEAR, 2ND PINION (13T)	1	1	1			
12	5EB–15163–01	HOUSING, BEARING 1	1	1	1			
13	93306–30525	BEARING (B6305)	1	1	1			
14	93306–20464	BEARING	1	1	1			
15	90149–06285	SCREW	3	3	3			
16	5EB–17421–00	AXLE, DRIVE	1	1	1			
17	93306–30546	BEARING (B6305A5 SPECIAL)	1	1	1			
18	90387–2504A	COLLAR	1	1	1			
19	90387–2813C	COLLAR	1	1	1			
20	5EB–17221–00	GEAR, 2ND WHEEL (37T)	1	1	1			
21	90209–25342	WASHER	3	3	3			
22	93440–28062	CIRCLIP	3	3	3			
23	5MT–17261–00	GEAR, 6TH WHEEL (26T)	1	1	1			
24	90387–2813D	COLLAR	2	2	2			
25	5EB–17241–00	GEAR, 4TH WHEEL (32T)	1	1	1			
26	90209–25349	WASHER	1	1	1			
27	90209–25350	WASHER	1	1	1			

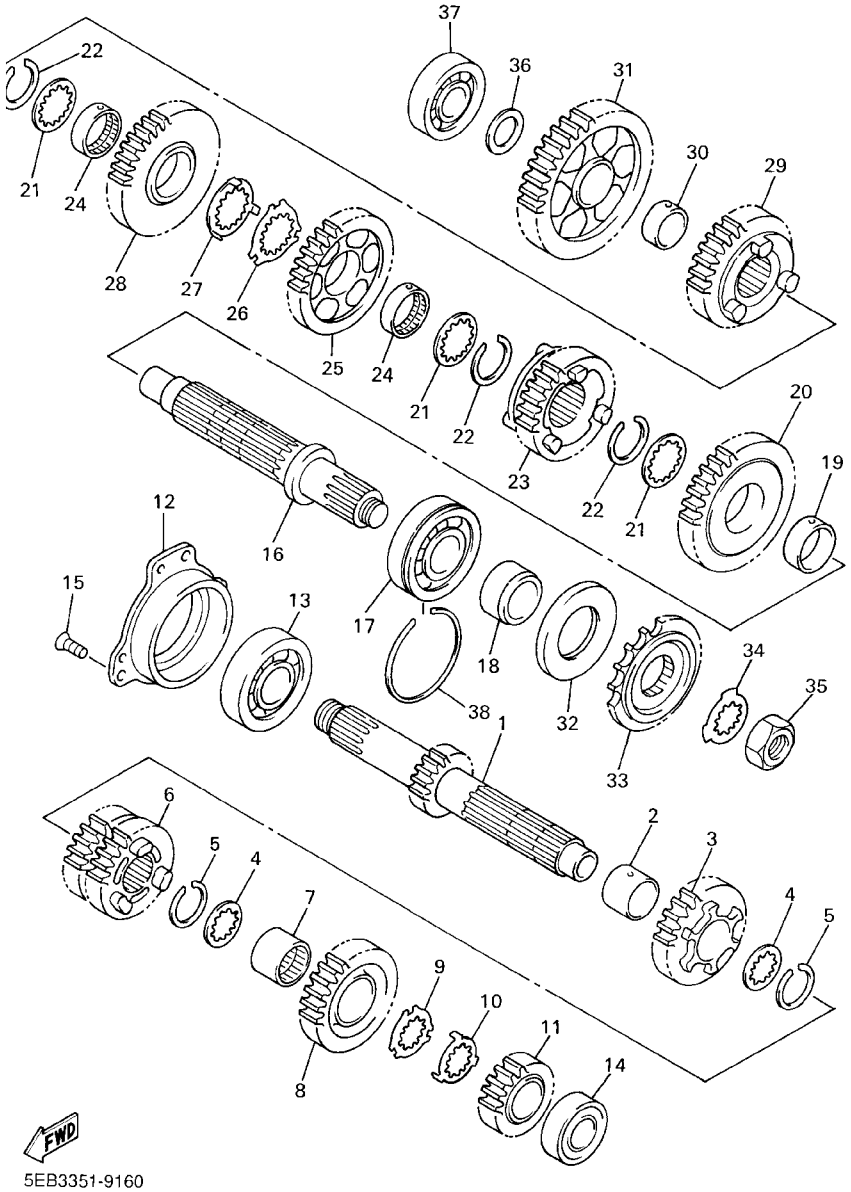

FIG. 18 TRANSMISSION

REF. NO.	PART NO.	DESCRIPTION	5MTF	5MTG	5MTH			REMARKS
28	5EB–17231–00	GEAR, 3RD WHEEL (28T)	1	1	1			
29	5MT–17251–00	GEAR, 5TH WHEEL (25T)	1	1	1			
30	90387–2202V	COLLAR	1	1	1			
31	5EB–17211–00	GEAR, 1ST WHEEL (37T)	1	1	1			
32	93102–35423	OIL SEAL	1	1	1			
33	2GH–17460–00	SPROCKET,DRIVE 16T(2GH1746160)	1	1	1			
34	90215–21022	WASHER, LOCK	1	1	1			
35	90179–18020	NUT	1	1	1			
36	90201–20278	WASHER, PLATE	1	1	1			
37	93306–20464	BEARING	1	1	1			
38	278–17424–01	CIRCLIP 1	1	1	1			

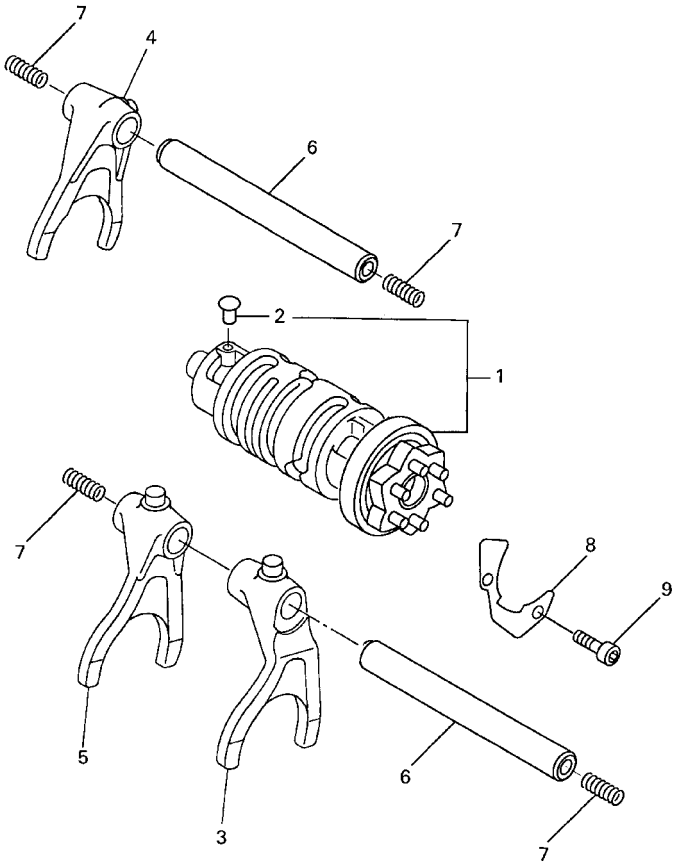

5EB3351-9170

FIG. 19 SHIFT CAM. FORK

REF. NO.	PART NO.	DESCRIPTION	5MTF	5MTG	5MTH			REMARKS
1	5MT–18540–00	SHIFT CAM ASSY	1	1	1			
2	136–18542–00	.POINT, NEUTRAL	1	1	1			
3	5EB–18511–00	FORK, SHIFT 1	1	1	1			
4	5MT–18512–00	FORK, SHIFT 2	1	1	1			
5	5EB–18513–00	FORK, SHIFT 3	1	1	1			
6	4XV–18531–00	BAR, SHIFT FORK GUIDE 1	2	2	2			
7	90501–064L1	SPRING, COMPRESSION	4	4	4			
8	5EB–18536–00	STOPPER, SHIFT BAR	1	1	1			
9	90110–06226	BOLT, HEXAGON SOCKET HEAD	2	2	2			

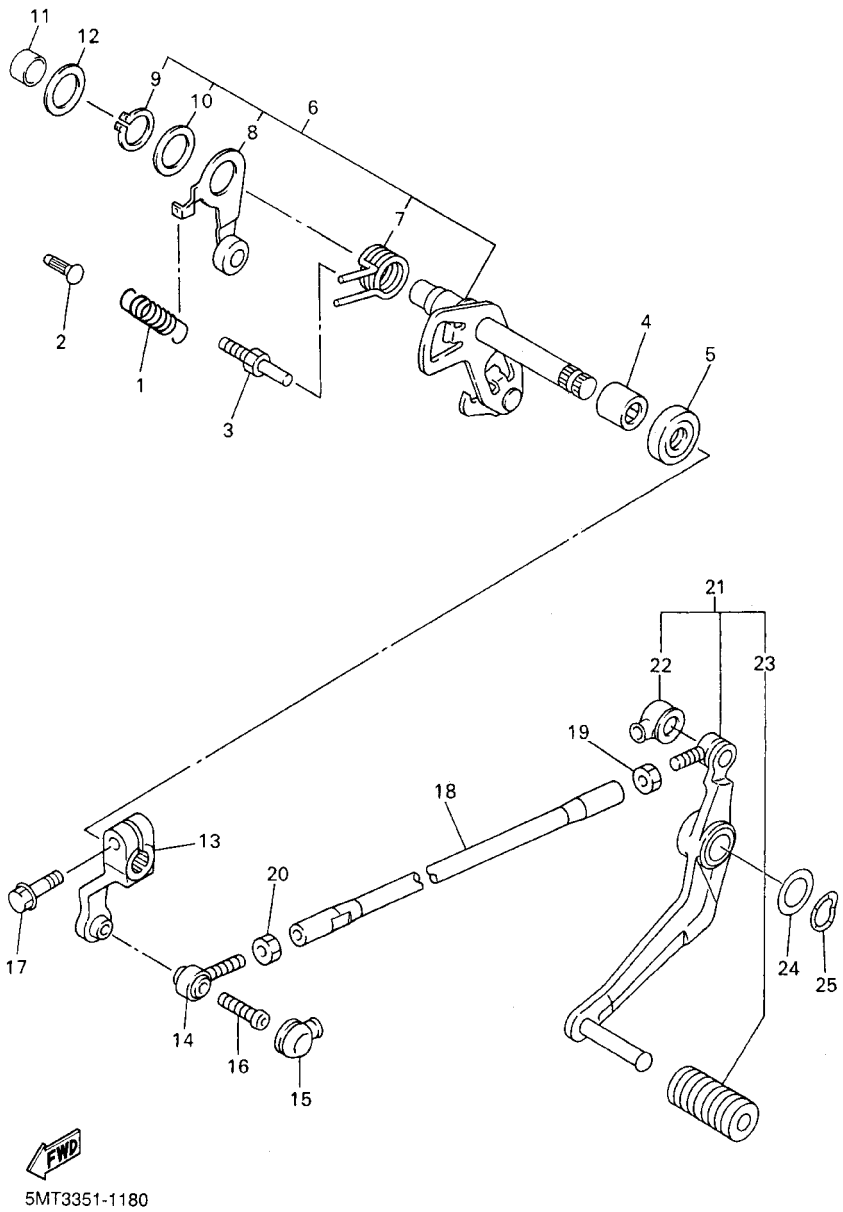

FIG. 20 SHIFT SHAFT

REF. NO.	PART NO.	DESCRIPTION	5MTF	5MTG	5MTH			REMARKS
1	90506–14003	SPRING, TENSION	1	1	1			
2	132–16346–00	HOOK, SPRING	1	1	1			
3	4XV–18127–00	STOPPER, SCREW	1	1	1			
4	93317–11287	BEARING	1	1	1			
5	93101–12004	OIL SEAL	1	1	1			
6	5MT–18101–00	SHIFT SHAFT ASSY	1	1	1			
7	90508–295B2	.SPRING, TORSION	1	1	1			
8	4XV–18140–00	.STOPPER LEVER ASSY	1	1	1			
9	99009–17400	.CIRCLIP	1	1	1			
10	90201–177G4	.WASHER, PLATE	1	1	1			
11	90387–09001	COLLAR	1	1	1			
12	90201–154E8	WASHER, PLATE (1.0T)	1	1	1			
13	5EB–18112–01	ARM, SHIFT	1	1	1			
14	3TC–18116–00	JOINT, ROD 1	1	1	1			
15	4XV–18154–00	COVER, DUST	1	1	1			
16	90111–06019	BOLT	1	1	1			
17	95824–06020	BOLT, FLANGE	1	1	1			
18	5EB–18115–00	ROD, SHIFT	1	1	1			
19	90170–08358	NUT	1	1	1			
20	95304–06700	NUT	1	1	1			
21	5EB–18110–10	SHIFT PEDAL ASSY	1	1	1			
22	2H9–18154–00	.COVER, DUST	1	1	1			
23	5EB–18113–00	.COVER, SHIFT PEDAL	1	1	1			
24	90201–12013	WASHER, PLATE	1	1	1			
25	90206–12074	WASHER, WAVE	1	1	1			

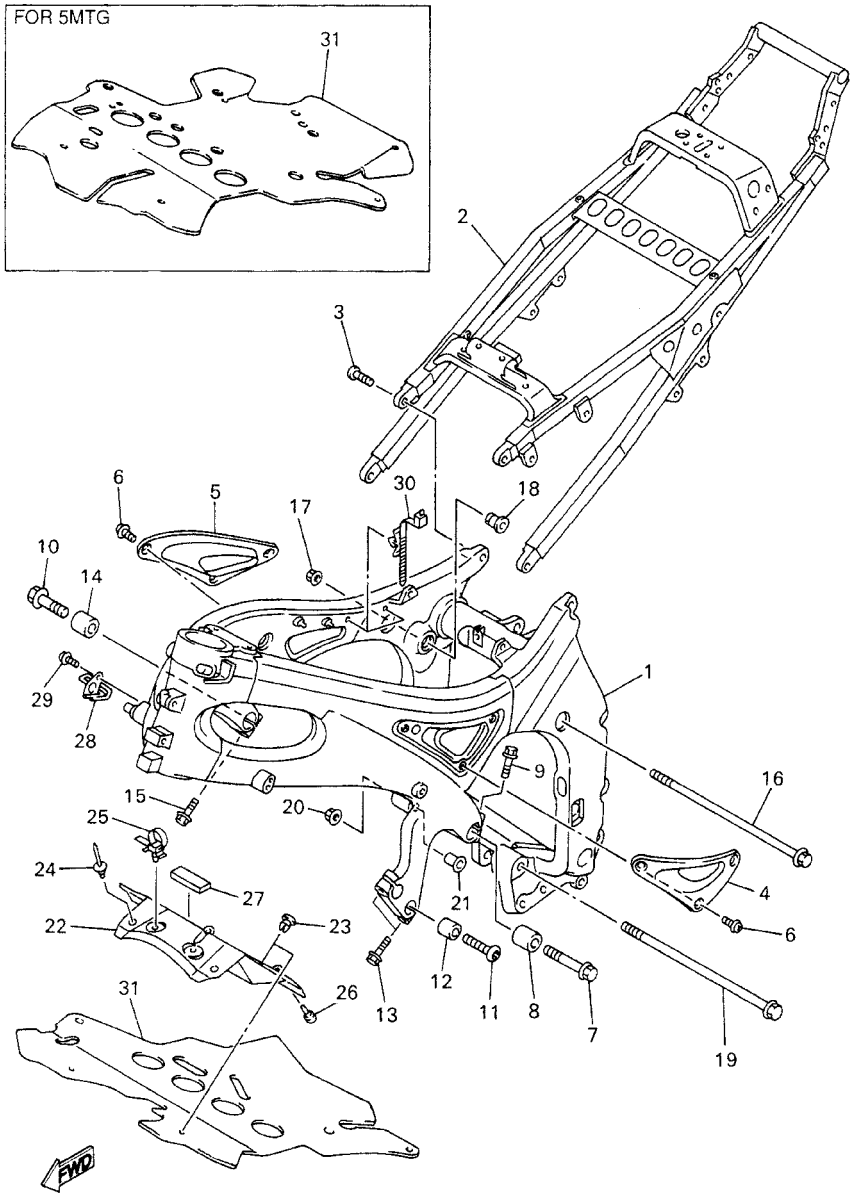

5MTF100-2210

FIG. 21 FRAME

REF. NO.	PART NO.	DESCRIPTION	5MTF	5MTG	5MTH			REMARKS
1	5EB–21110–01	FRAME COMP.	1	1	1			
2	5EB–21190–01	REAR FRAME COMP.	1	1	1			
3	90111–10018	BOLT	4	4	4			
4	5EB–2117V–00	COVER 7	1	1	1			
5	5EB–2117W–00	COVER 8	1	1	1			
6	90154–05059	SCREW, BINDING	6	6	6			
7	95027–12060	BOLT, FLANGE	1	1	1			
8	90387–1414W	COLLAR	1	1	1			
9	95027–08035	BOLT, FLANGE	1	1	1			
10	90105–12004	BOLT, FLANGE	1	1	1			
11	92017–10040	BOLT, BUTTON HEAD	2	2	2			
12	90387–1214V	COLLAR	2	2	2			
13	95027–06030	BOLT, FLANGE	2	2	2			
14	90387–1312P	COLLAR	1	1	1			
15	95027–08035	BOLT, FLANGE	1	1	1			
16	90105–10042	BOLT, FLANGE	1	1	1			
17	90179–10696	NUT	1	1	1			
18	5EB–21495–00	BOLT, ENGINE ADJUSTING	1	1	1			
19	90105–106A2	BOLT, FLANGE	1	1	1			
20	90179–10696	NUT	1	1	1			
21	5EB–21495–00	BOLT, ENGINE ADJUSTING	1	1	1			
22	5EB–2117M–00	COVER 2	1		1			
	5EB–2117M–10	COVER 2		1				
23	90269–07076	RIVET	3	3	3			
24	90269–07077	RIVET	2	2	2			
25	90464–12036	CLAMP	2	2	2			
26	36Y–21639–00	DAMPER 2	2	2	2			

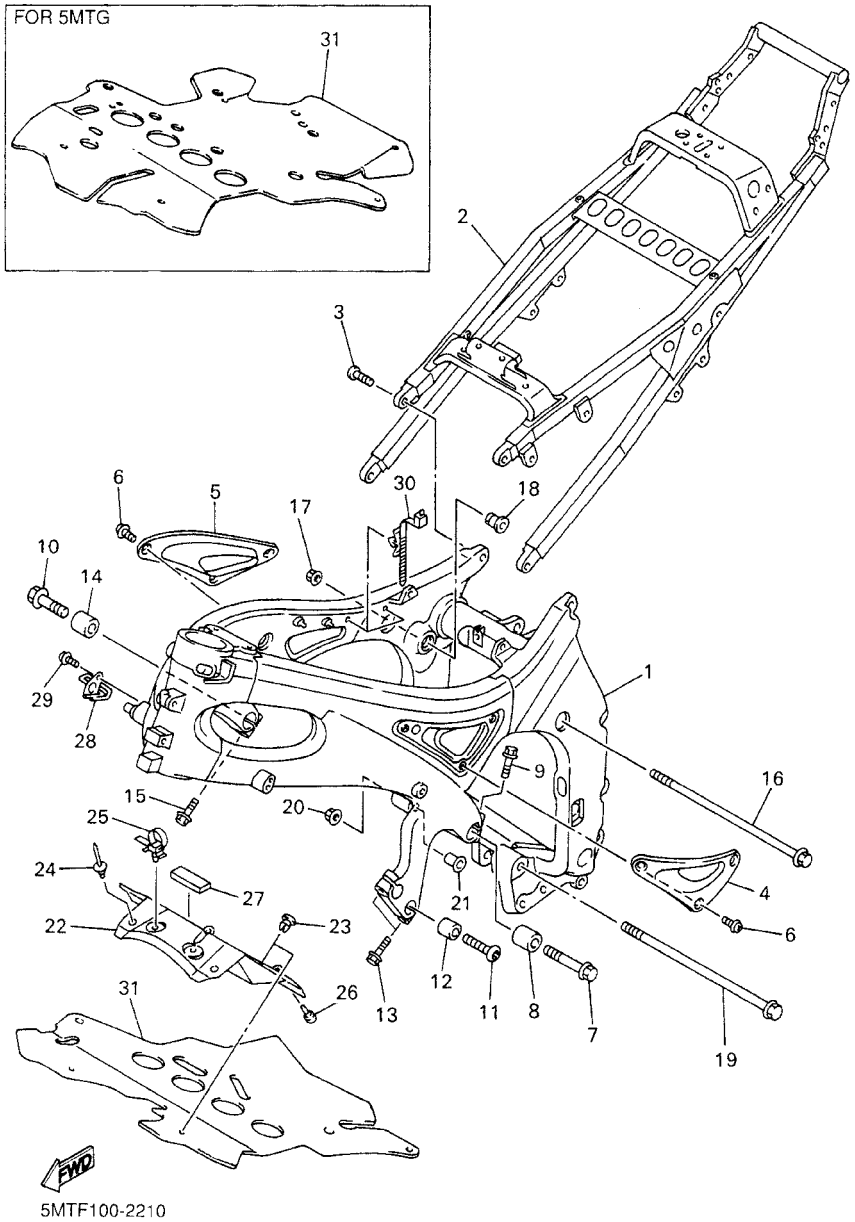

FIG. 21 FRAME

REF. NO.	PART NO.	DESCRIPTION	5MTF	5MTG	5MTH			REMARKS
27	3KJ–15337–00	DAMPER 4	1	1	1			
28	5EB–26132–00	GUIDE, CABLE 2	1	1	1			
29	98507–06012	SCREW, PAN HEAD	1	1	1			
30	90464–20213	CLAMP	2	2	2			
31	5EB–12682–01	PROTECTOR, HEAT	1		1			
	5GV–12682–00	PROTECTOR, HEAT		1				

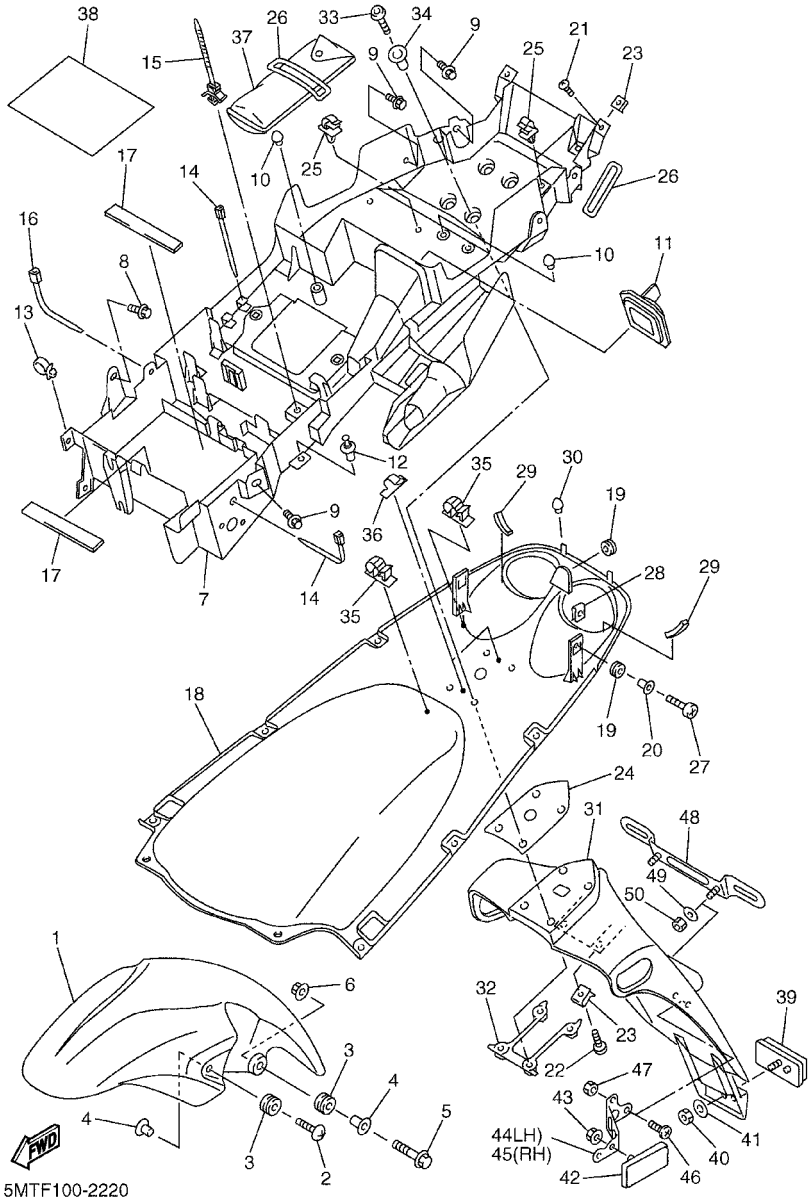

FIG. 22 FENDER

REF. NO.	PART NO.	DESCRIPTION	5MTF	5MTG	5MTH			REMARKS
1	5EB–21511–00–P1	FENDER, FRONT	1	1	1			UR DPBMC
	5EB–21511–00–P0	FENDER, FRONT	1	1	1			UR VRC1
2	90154–06061	SCREW, BINDING	2	2	2			
3	90480–12072	GROMMET	4	4	4			
4	90387–065J6	COLLAR	4	4	4			
5	95024–06030	BOLT, FLANGE	2	2	2			
6	95707–06500	NUT, FLANGE	2	2	2			
7	5MT–8212B–00	BOX, BATTERY 1	1	1	1			
8	90119–06010	BOLT, WITH WASHER	1	1	1			
9	90119–06009	BOLT, WITH WASHER	5	5	5			
10	4G0–21639–00	DAMPER 2	3	3	3			
11	5MT–2172X–00	COVER, TAILLIGHT	1	1	1			
12	90269–07077	RIVET	2	2	2			
13	90464–13133	CLAMP	1	1	1			
14	90464–13073	CLAMP	2	2	2			
15	90464–10112	CLAMP	1	1	1			
16	90464–13077	CLAMP	1	1	1			
17	1AE–2834E–00	DAMPER	2	2	2			
18	5MT–21611–00–P1	FENDER, REAR	1	1	1			UR DPBMC
	5MT–21611–00–P0	FENDER, REAR	1	1	1			UR VRC1
19	4XV–83513–00	DAMPER	3	3	3			
20	90387–065G0	COLLAR	2	2	2			
21	90154–05041	SCREW, BINDING	2	2	2			
22	90154–05041	SCREW, BINDING	2	2	2			
23	90183–05061	NUT, SPRING	4	4	4			
24	5MT–21669–00	SEAL	1	1	1			
25	90464–07259	CLAMP	3	3	3			

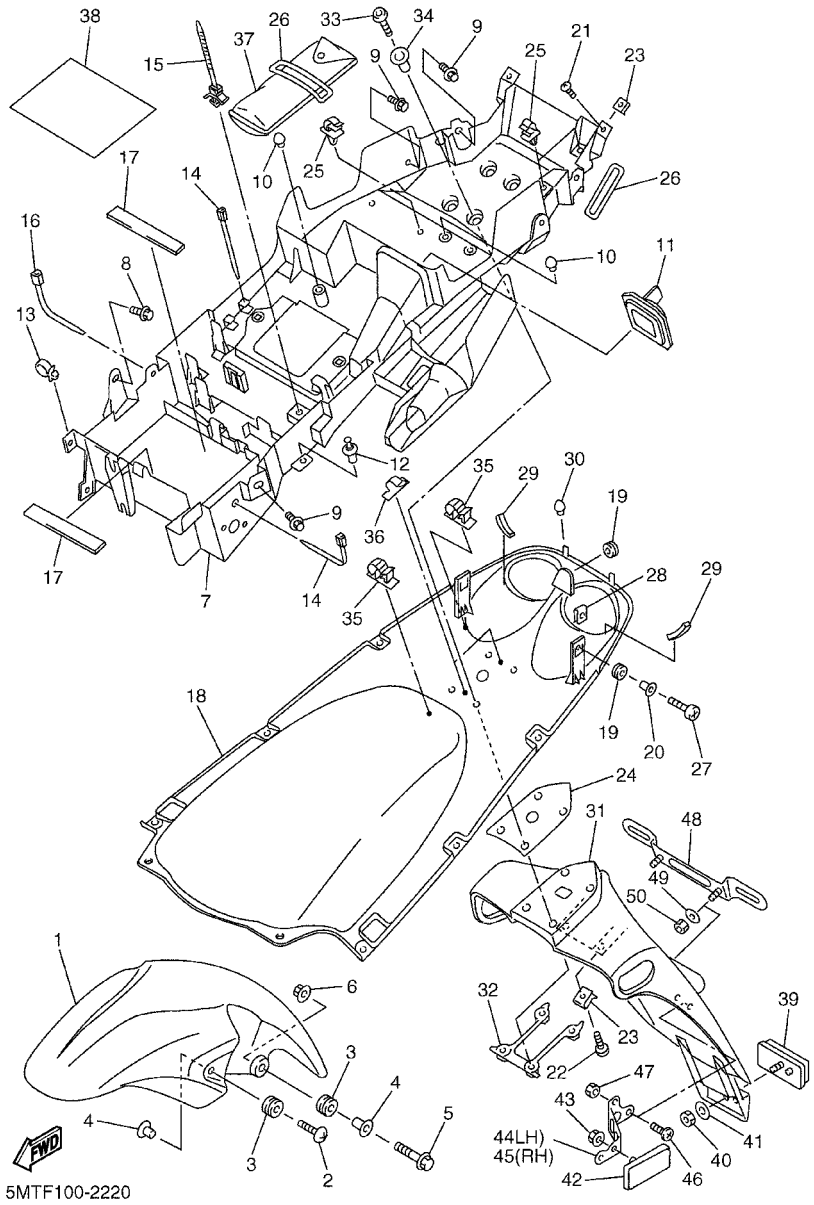

FIG. 22 FENDER

REF. NO.	PART NO.	DESCRIPTION	5MTF	5MTG	5MTH			REMARKS
26	4XV–21376–00	BAND, TOOL	2	2	2			
27	98907–05020	SCREW, BIND	2	2	2			
28	90183–05024	NUT, SPRING	2	2	2			
29	5MT–21717–00	DAMPER	2	2	2			
30	4G0–21639–00	DAMPER 2	2	2	2			
31	5MT–21629–10	GUARD, MUD	1	1	1			
32	5MT–2161G–00	BRACKET 6	1	1	1			
33	92017–06020	BOLT, BUTTON HEAD	4	4	4			
34	90387–065G0	COLLAR	4	4	4			
35	90464–09009	CLAMP	2	2	2			
36	90465–04013	CLAMP	2	2	2			
37	5EB–28100–00	TOOL KIT	1	1	1			
38	5EB–14733–00	MAT 1	1	1	1			
39	3Y6–85130–02	REAR REFLECTOR ASSY	1	1	1			
40	95607–05100	NUT, U	1	1	1			
41	90201–05725	WASHER, PLATE	1	1	1			
42	3Y6–85130–02	REAR REFLECTOR ASSY	2	2	2			
43	95707–05500	NUT, FLANGE	2	2	2			
44	5MT–21688–00	BRACKET, REAR STAY	1	1	1			L,H
45	5MT–21689–00	BRACKET, REAR STAY 2	1	1	1			R,H
46	90149–04278	SCREW	4	4	4			
47	95607–04100	NUT, U	4	4	4			
48	5MT–84751–00	BRACKET, LICENSE	1	1	1			
49	90201–06057	WASHER, PLATE	2	2	2			
50	95607–06100	NUT, U	2	2	2			

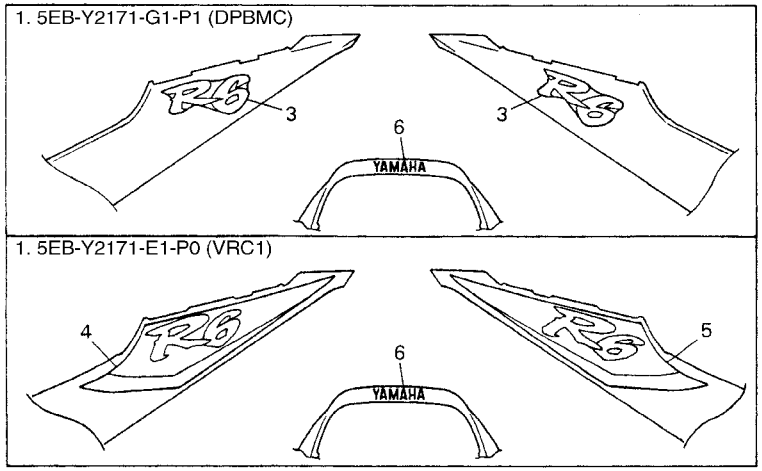

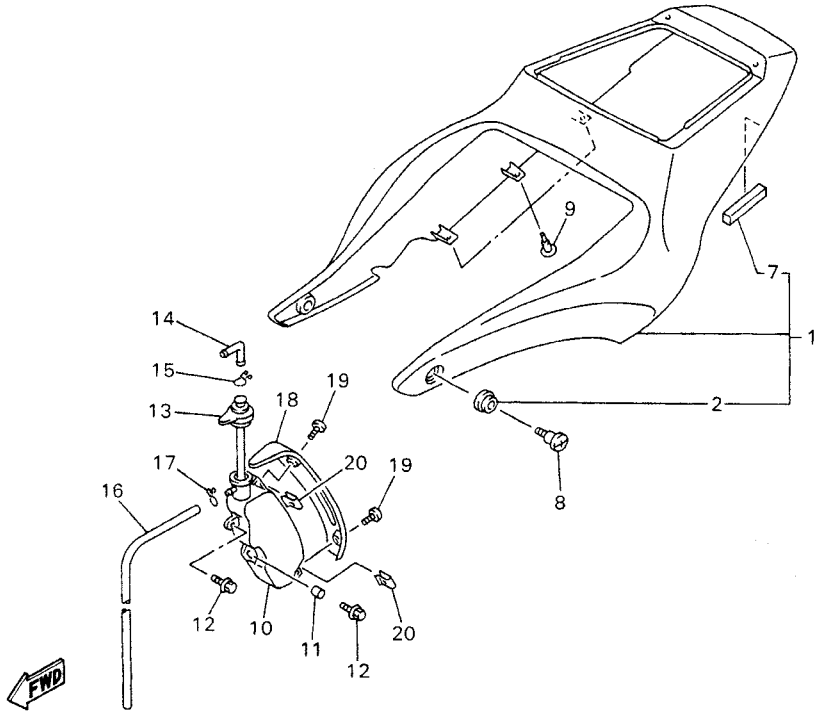

5MTF100-2230

FIG. 23 SIDE COVER

REF. NO.	PART NO.	DESCRIPTION	5MTF	5MTG	5MTH			REMARKS
1	5EB–Y2171–G1–P1	COVER, SIDE 1	1	1	1			UR DPBMC
	5EB–Y2171–E1–P0	COVER, SIDE 1	1	1	1			UR VRC1
2	90480–13398	.GROMMET	2	2	2			
3	5EB–21781–30	.EMBLEM 1	2	2	2			FOR DPBMC
4	5MT–2173E–00	.GRAPHIC 1	1	1	1			FOR VRC1
5	5MT–2173F–00	.GRAPHIC 2	1	1	1			FOR VRC1
6	99241–00080	.EMBLEM, YAMAHA	1	1	1			
7	3VD–12465–00	.DAMPER, RADIATOR	2	2	2			
8	90150–06036	SCREW, ROUND HEAD	2	2	2			
9	90269–07077	RIVET	6	6	6			
10	5EB–21871–01	TANK, RECOVERY	1	1	1			
11	90387–066K1	COLLAR	1	1	1			
12	90119–06117	BOLT, WITH WASHER	2	2	2			
13	5EB–21875–00	CAP	1	1	1			
14	26H–21828–00	ELBOW	1	1	1			
15	90467–11019	CLIP	1	1	1			
16	90445–08605	HOSE	1	1	1			
17	90467–08003	CLIP	1	1	1			
18	5EB–2172W–00	COVER	1	1	1			
19	90150–05039	SCREW, ROUND HEAD	2	2	2			
20	90183–05061	NUT, SPRING	2	2	2			

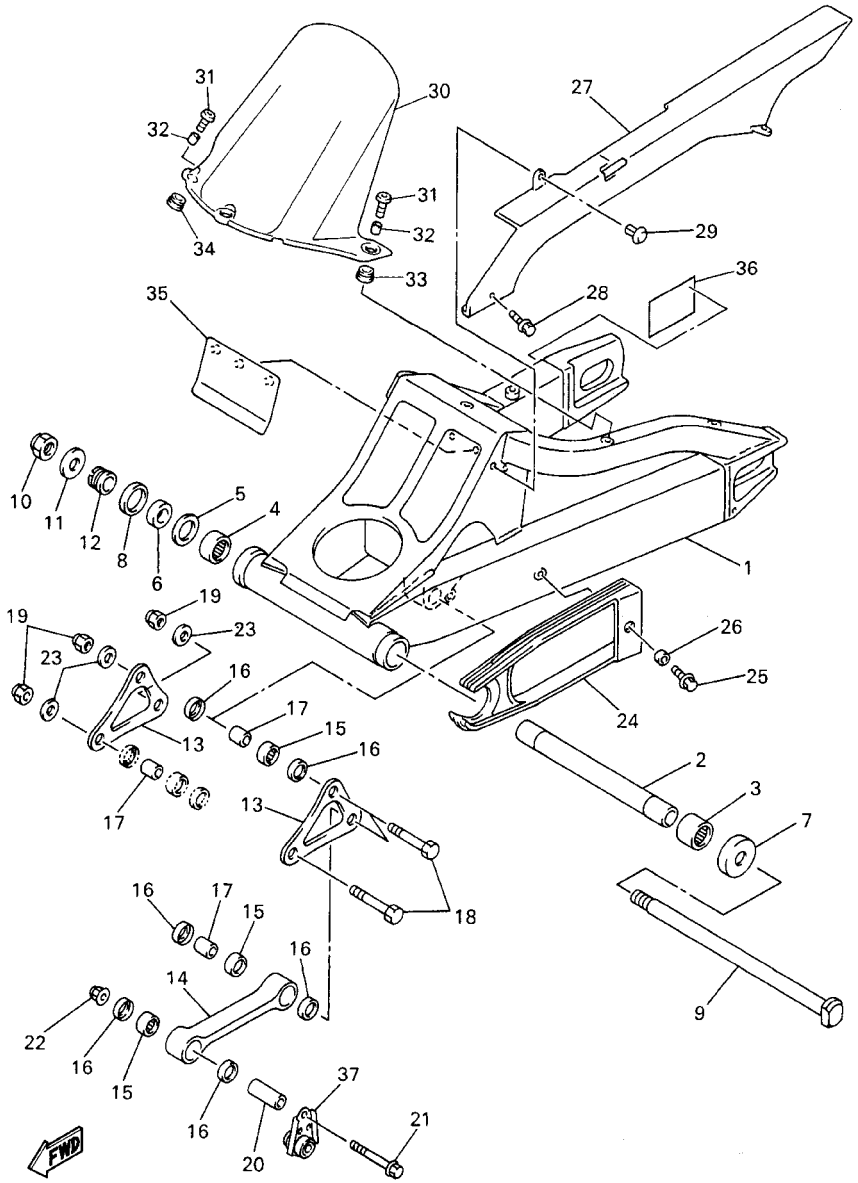

FIG. 24 REAR ARM

REF. NO.	PART NO.	DESCRIPTION	5MTF	5MTG	5MTH			REMARKS
1	5MT–22110–01	REAR ARM COMP.	1	1	1			
2	5EB–22184–00	BUSH	1	1	1			
3	93315–42523	BEARING	1	1	1			
4	93315–42536	BEARING	1	1	1			
5	5EB–22127–00	SHIM	1	1	1			
6	5EB–22123–00	BUSH 1	1	1	1			
7	3FV–22128–00	COVER, THRUST 1	1	1	1			
8	93109–33049	OIL SEAL	1	1	1			
9	4FN–22141–00	SHAFT, PIVOT	1	1	1			
10	90185–18104	NUT, SELF–LOCKING	1	1	1			
11	90201–186M4	WASHER, PLATE	1	1	1			
12	5EB–22125–00	BOLT	1	1	1			
13	5EB–2217A–00	ARM, RELAY	2	2	2			
14	5EB–2217M–00	ARM 1	1	1	1			
15	93315–31759	BEARING	3	3	3			
16	93109–17071	OIL SEAL	6	6	6			
17	90387–127W0	COLLAR	3	3	3			
18	90101–10709	BOLT	3	3	3			
19	95617–10100	NUT, U	3	3	3			
20	90387–1012B	COLLAR	1	1	1			
21	90105–10323	BOLT, FLANGE	1	1	1			
22	95607–10200	NUT, SELF–LOCKING	1	1	1			
23	90201–101J1	WASHER, PLATE	3	3	3			
24	5EB–22151–00	SEAL, GUARD	1	1	1			
25	90119–06227	BOLT, WITH WASHER	1	1	1			
26	90387–06372	COLLAR	1	1	1			
27	5EB–22311–01	CASE, CHAIN	1	1	1			

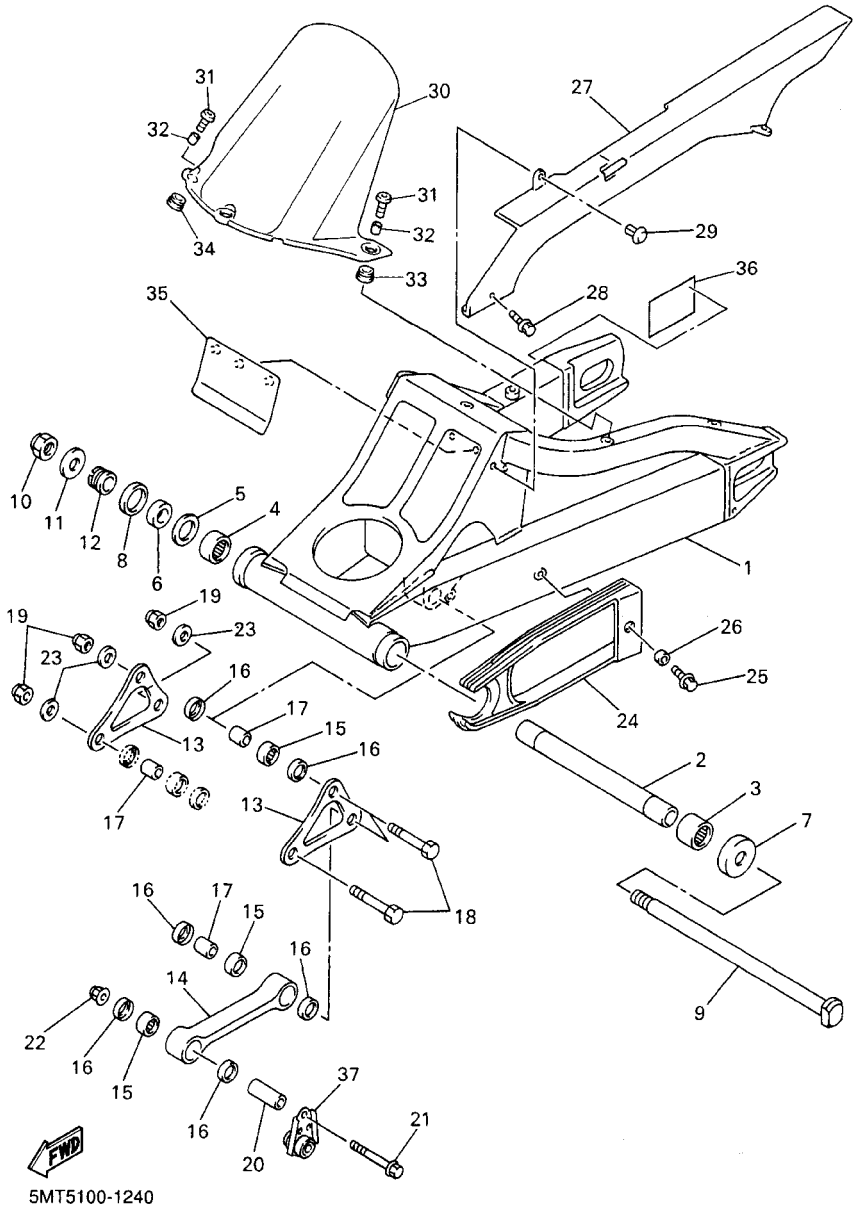

FIG. 24 REAR ARM

REF. NO.	PART NO.	DESCRIPTION	5MTF	5MTG	5MTH			REMARKS
28	90119–06052	BOLT, WITH WASHER	2	2	2			
29	90269–07076	RIVET	1	1	1			
30	5MT–21650–00	REAR FENDER COMP.	1	1	1			
31	90149–06302	SCREW	3	3	3			
32	90387–0600V	COLLAR	3	3	3			
33	90480–12005	GROMMET	2	2	2			
34	90480–12003	GROMMET	1	1	1			
35	30X–21621–00	FLAP	1	1	1			
36	5MT–2179V–10	PLATE, EPA 1(NON CALIFORNIA)	1					
	5MT–2179R–10	PLATE, EPA 2(CALIFORNIA)		1				
37	5EB–21446–00	STAY, MUFFLER 2	1	1	1			

FIG. 25 REAR SUSPENSION

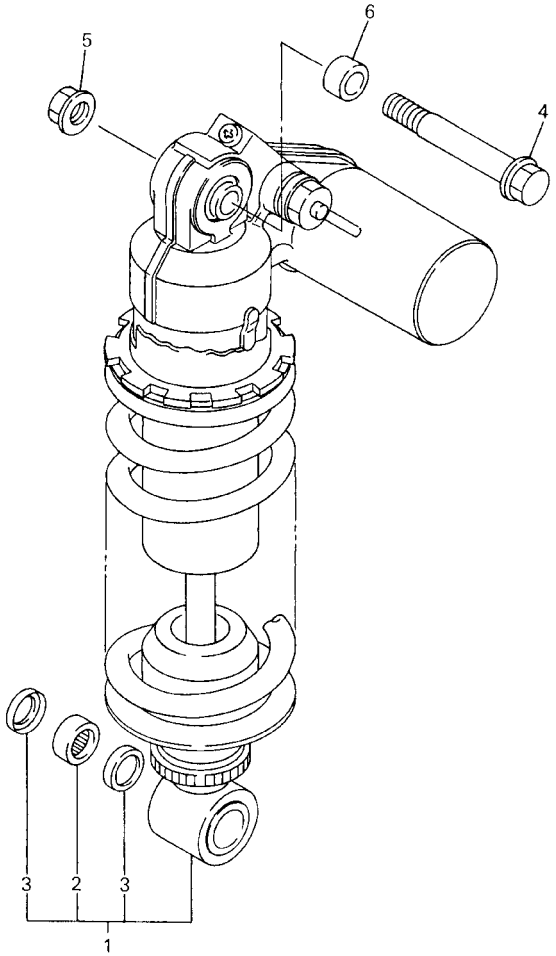

5GV3100-9250

REF. NO.	PART NO.	DESCRIPTION	5MTF	5MTG	5MTH			REMARKS
1	5MT–22210–10	SHOCK ABSORBER ASSY, REAR	1	1				
	5MT–22210–20	SHOCK ABSORBER ASSY, REAR			1			
2	93315–31759	.BEARING	1	1	1			
3	93109–17071	.OIL SEAL	2	2	2			
4	90105–10376	BOLT, FLANGE	1	1	1			
5	95607–10200	NUT, SELF–LOCKING	1	1	1			
6	90387–1013U	COLLAR	1	1	1			

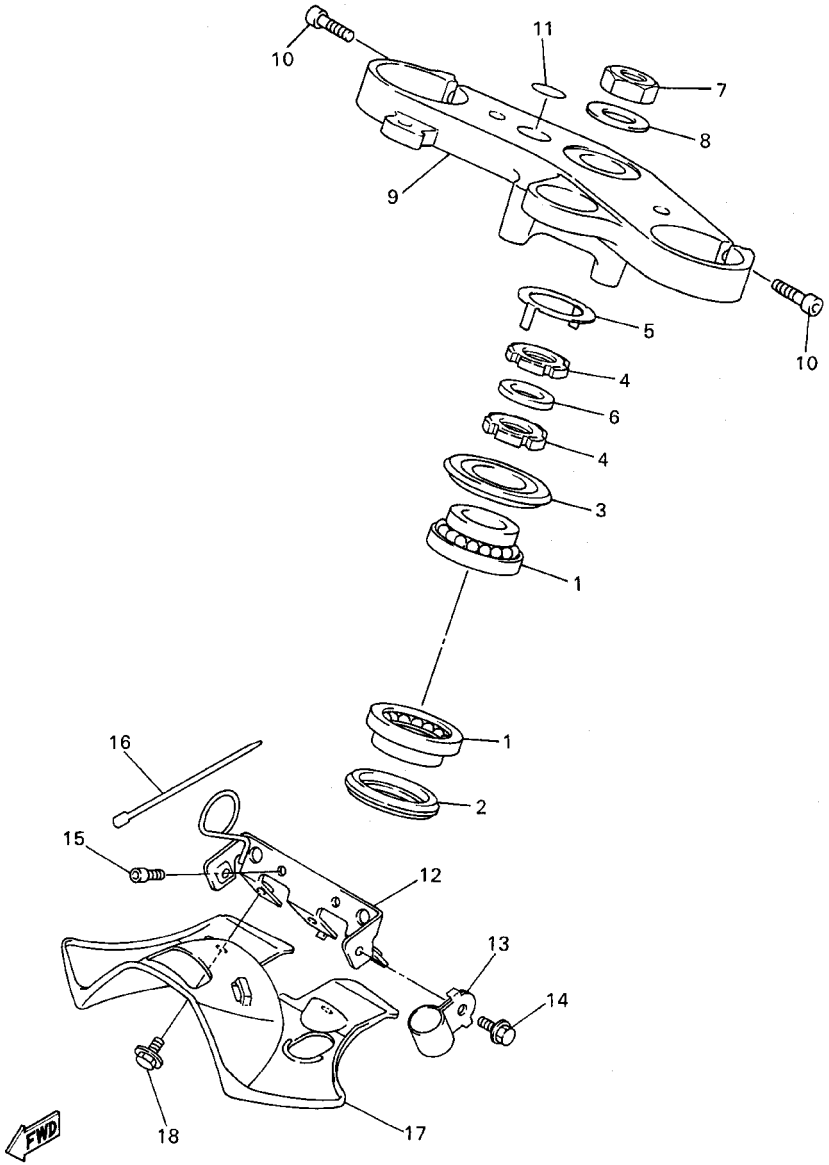

5MT3351-1240

FIG. 26 STEERING

REF. NO.	PART NO.	DESCRIPTION	5MTF	5MTG	5MTH			REMARKS
1	93399–99932	BEARING	2	2	2			
2	3FV–23462–00	SEAL, STEERING	1	1	1			
3	4XV–23415–01	COVER, BALL RACE 1	1	1	1			
4	90179–30691	NUT	2	2	2			
5	4XV–23418–00	WASHER, SPECIAL	1	1	1			
6	90202–30235	WASHER, PLATE	1	1	1			
7	90170–28419	NUT	1	1	1			
8	90201–281U8	WASHER, PLATE	1	1	1			
9	5EB–23435–01	CROWN, HANDLE	1	1	1			
10	91314–08030	BOLT	2	2	2			
11	4XV–2341B–00	EMBLEM	1	1	1			
12	5EB–23377–00	BRACKET, HORN	1	1	1			
13	90461–10132	CLAMP	2	2	2			
14	95807–06012	BOLT, FLANGE	2	2	2			
15	91317–06012	BOLT	2	2	2			
16	3MA–82591–00	BAND	1	1	1			
17	5EB–23818–00	COVER, STEERING	1	1	1			
18	90119–06117	BOLT, WITH WASHER	2	2	2			

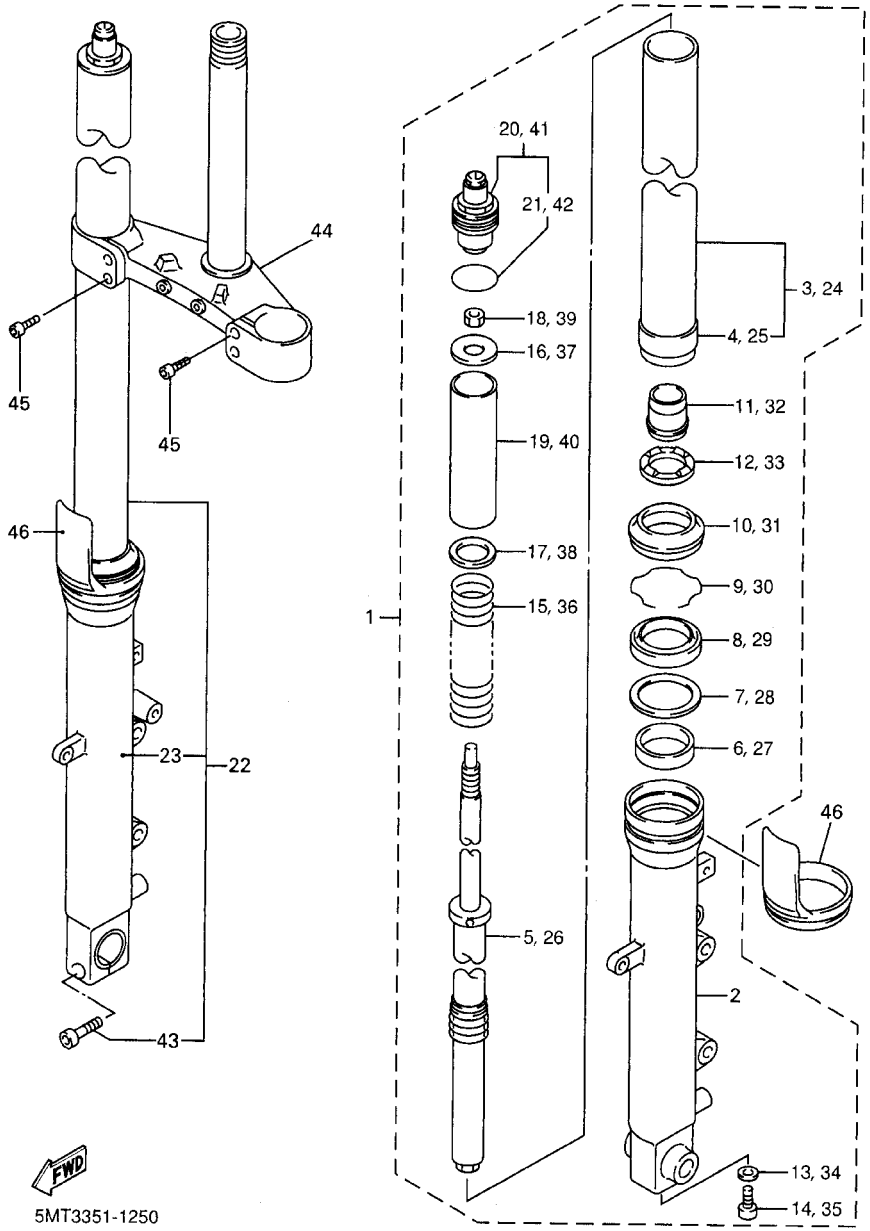

FIG. 27 FRONT FORK

REF. NO.	PART NO.	DESCRIPTION	5MTF	5MTG	5MTH			REMARKS
1	5MT–23102–01	FRONT FORK ASSY (L.H)	1	1	1			
2	5MT–23126–00	.TUBE, OUTER (LEFT)	1	1	1			
3	5MT–23110–00	.INNER TUBE COMP.1	1	1	1			
4	5EB–23171–00	..PISTON, FRONT FORK	1	1	1			
5	5MT–23170–00	.CYLINDER COMP., FRONT FORK	1	1	1			
6	5EB–23125–00	.METAL, SLIDE 1	1	1	1			
7	4V4–23146–L0	.WASHER, OIL SEAL	1	1	1			
8	4PU–23145–01	.OIL SEAL	1	1	1			
9	4V4–23153–L0	.RING, SNAP	1	1	1			
10	4PU–23144–00	.SEAL, DUST	1	1	1			
11	5MT–23173–00	.SPINDLE, TAPER	1	1	1			
12	5MT–23195–00	.RUBBER	1	1	1			
13	2K8–23158–L0	.GASKET	1	1	1			
14	3LC–23181–00	.BOLT, HEXAGON SOCKET HEAD	1	1	1			
15	5MT–23141–00	.SPRING, FRONT FORK	1	1	1			
16	3TJ–23149–10	.WASHER, SPRING UPPER	1	1	1			
17	3LR–23149–00	.WASHER, SPRING UPPER	1	1	1			
18	3LC–23357–00	.NUT	1	1	1			
19	5MT–23118–00	.SPACER	1	1	1			
20	5MT–23111–00	.BOLT, CAP	1	1	1			
21	4V4–23188–L0	..O–RING	1	1	1			
22	5MT–23103–01	FRONT FORK ASSY (R.H)	1	1	1			
23	5MT–23136–00	.TUBE, OUTER (RIGHT)	1	1	1			
24	5MT–23110–00	.INNER TUBE COMP.1	1	1	1			
25	5EB–23171–00	..PISTON, FRONT FORK	1	1	1			
26	5MT–23170–00	.CYLINDER COMP., FRONT FORK	1	1	1			
27	5EB–23125–00	.METAL, SLIDE 1	1	1	1			

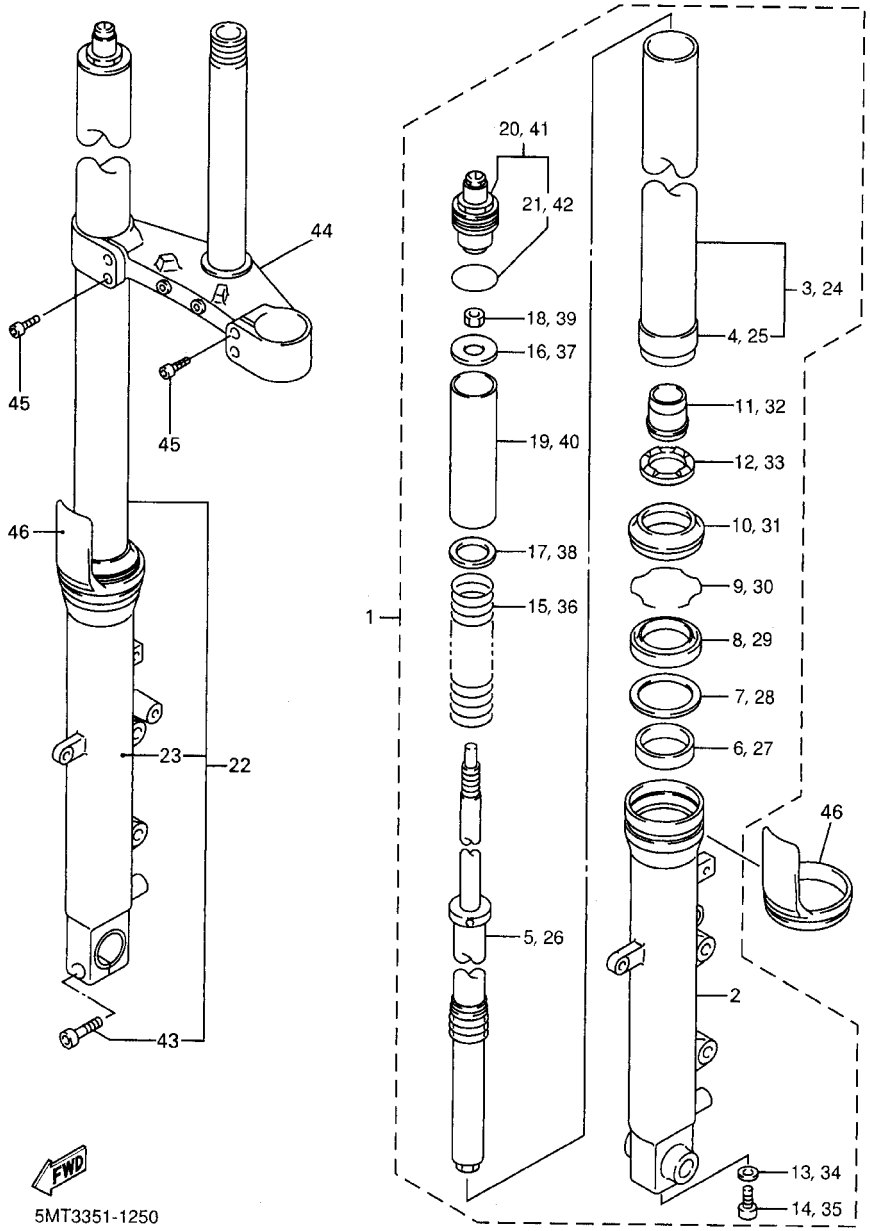

FIG. 27 FRONT FORK

REF. NO.	PART NO.	DESCRIPTION	5MTF	5MTG	5MTH			REMARKS
28	4V4–23146–L0	.WASHER, OIL SEAL	1	1	1			
29	4PU–23145–01	.OIL SEAL	1	1	1			
30	4V4–23153–L0	.RING, SNAP	1	1	1			
31	4PU–23144–00	.SEAL, DUST	1	1	1			
32	5MT–23173–00	.SPINDLE, TAPER	1	1	1			
33	5MT–23195–00	.RUBBER	1	1	1			
34	2K8–23158–L0	.GASKET	1	1	1			
35	3LC–23181–00	.BOLT, HEXAGON SOCKET HEAD	1	1	1			
36	5MT–23141–00	.SPRING, FRONT FORK	1	1	1			
37	3TJ–23149–10	.WASHER, SPRING UPPER	1	1	1			
38	3LR–23149–00	.WASHER, SPRING UPPER	1	1	1			
39	3LC–23357–00	.NUT	1	1	1			
40	5MT–23118–00	.SPACER	1	1	1			
41	5MT–23111–00	.BOLT, CAP	1	1	1			
42	4V4–23188–L0	..O–RING	1	1	1			
43	91314–08035	.BOLT	1	1	1			
44	5MT–23340–00	UNDER BRACKET COMP.	1	1	1			
45	91314–08025	BOLT	4	4	4			
46	4PU–2331G–00	COVER	2	2	2			

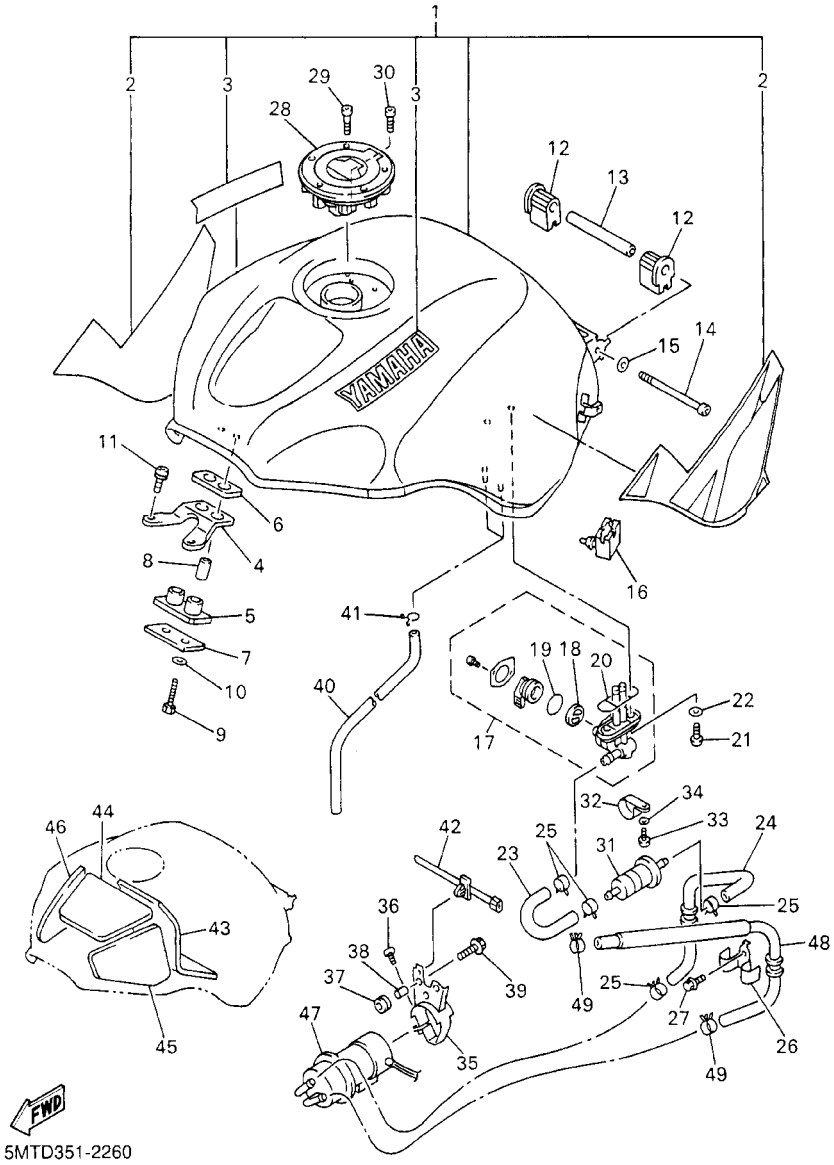

FIG. 28 FUEL TANK

REF. NO.	PART NO.	DESCRIPTION	5MTF	5MTG	5MTH			REMARKS
1	5EB–Y2410–30–X2	FUEL TANK COMP.	1		1			UR DPBMC
	5EB–Y2410–30–X1	FUEL TANK COMP.	1		1			UR VRC1
2	5MT–24240–40	.GRAPHIC SET	1		1			UR FOR DPBMC
	5MT–24240–30	.GRAPHIC SET	1		1			UR FOR VRC1
3	4TV–2153A–40	.EMBLEM, YAMAHA	2		2			
4	5MT–24191–00	BRACKET, FUEL TANK 1	1		1			
5	5EB–24181–00	DAMPER, LOCATING 1	1		1			
6	2GH–24183–00	DAMPER, LOCATING 3	1		1			
7	2GH–24186–00	WASHER, SPECIAL	1		1			
8	90387–06027	COLLAR	2		2			
9	97007–06030	BOLT	2		2			
10	92907–06600	WASHER, PLATE	2		2			
11	90159–06005	SCREW, WITH WASHER	2		2			
12	5EB–24183–00	DAMPER, LOCATING 3	2		2			
13	90387–061W6	COLLAR	1		1			
14	91317–06090	BOLT	1		1			
15	90201–06050	WASHER, PLATE	1		1			
16	5EB–24182–00	DAMPER, LOCATING 2	2		2			
17	4TV–24500–00	FUEL COCK ASSY 1	1		1			
18	3XV–24523–00	.VALVE	1		1			
19	3XV–24534–00	.SEAL, COCK	1		1			
20	4X8–24512–00	.O–RING	1		1			
21	90149–06008	SCREW	2		2			
22	90202–05193	WASHER, PLATE	2		2			
23	5EB–24311–00	PIPE, FUEL 1	1		1			
24	5EB–24312–00	PIPE 2	1		1			
25	90467–14057	CLIP	4		4			

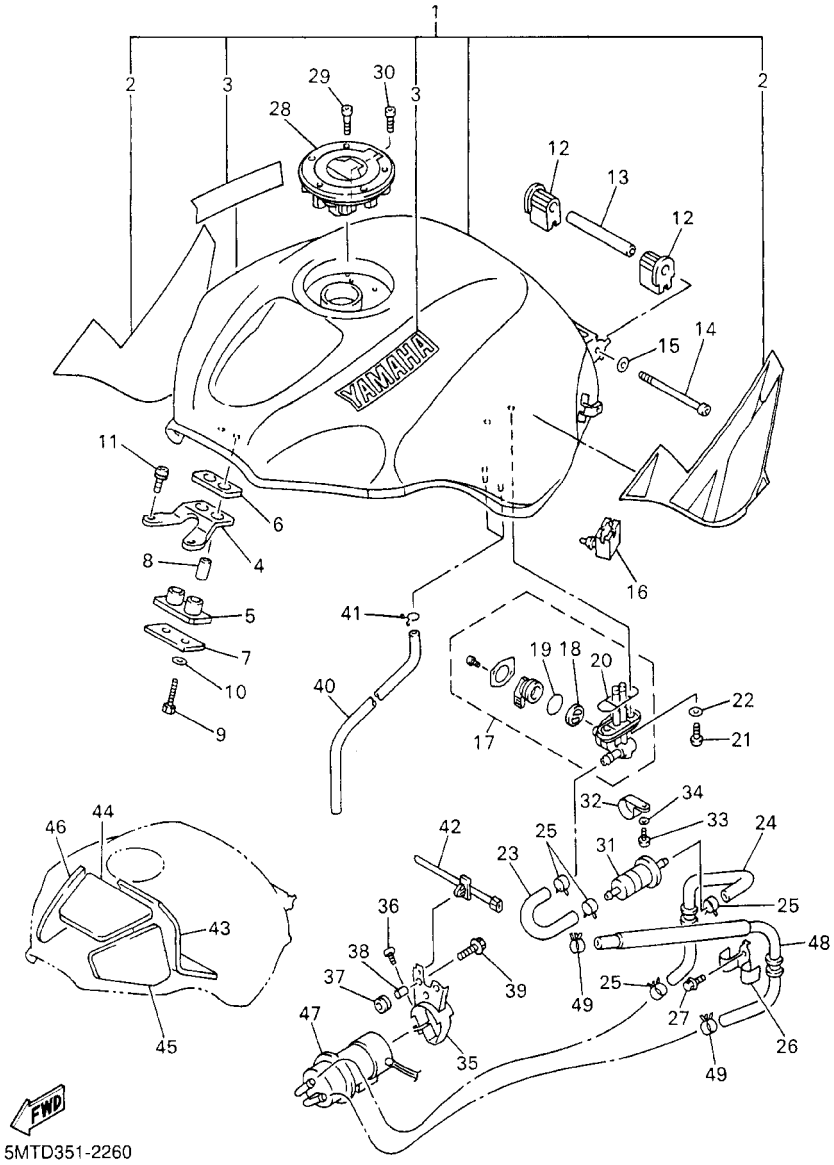

FIG. 28 FUEL TANK

REF. NO.	PART NO.	DESCRIPTION	5MTF	5MTG	5MTH			REMARKS
26	5EB–2417H–00	CLAMP 1	1		1			
27	95027–06012	BOLT, FLANGE	1		1			
28	5JJ–24602–00	CAP ASSY	1		1			
29	90110–05112	BOLT, HEXAGON SOCKET HEAD	3		3			
30	91317–05010	BOLT	1		1			
31	4TV–24560–00	FILTER ASSY	1		1			
32	1AE–24366–00	CLAMP, FUEL PIPE 1	1		1			
33	98507–06012	SCREW, PAN HEAD	1		1			
34	92907–06600	WASHER, PLATE	1		1			
35	5EB–24491–00	BRACKET, FUEL PUMP	1		1			
36	98507–05010	SCREW, PAN HEAD	1		1			
37	90480–13163	GROMMET	2		2			
38	90387–060G7	COLLAR	2		2			
39	90119–06096	BOLT, WITH WASHER	2		2			
40	90445–102G9	HOSE (L650)	2		2			
41	90467–10008	CLIP	2		2			
42	90464–12089	CLAMP	1		1			
43	5EB–2414K–00	DAMPER, PLATE 3	1		1			
44	5EB–2414H–00	DAMPER, PLATE 1	1		1			
45	5EB–2411J–00	DAMPER, SIDE COVER	1		1			
46	5EB–2414J–00	DAMPER, PLATE 2	1		1			
47	5EB–13907–01	FUEL PUMP COMP.	1		1			
48	5EB–14294–00	HOSE	1		1			
49	90467–11044	CLIP	2		2			

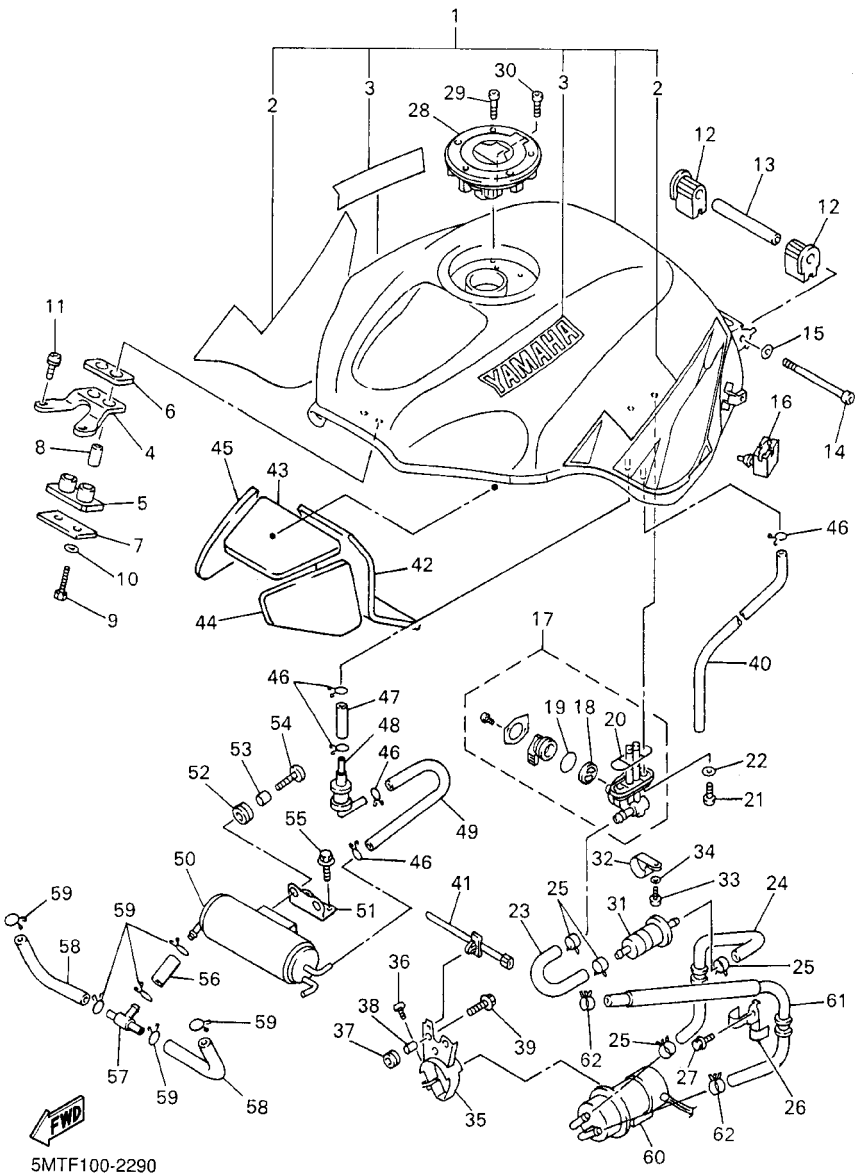

FIG. 29 FUEL TANK 2

REF. NO.	PART NO.	DESCRIPTION	5MTF	5MTG	5MTH			REMARKS
1	5EB–Y2410–30–X2	FUEL TANK COMP.		1				UR DPBMC
	5EB–Y2410–30–X1	FUEL TANK COMP.		1				UR VRC1
2	5MT–24240–40	.GRAPHIC SET		1				UR FOR DPBMC
	5MT–24240–30	.GRAPHIC SET		1				UR FOR VRC1
3	4TV–2153A–40	.EMBLEM, YAMAHA		2				
4	5MT–24191–00	BRACKET, FUEL TANK 1		1				
5	5EB–24181–00	DAMPER, LOCATING 1		1				
6	2GH–24183–00	DAMPER, LOCATING 3		1				
7	2GH–24186–00	WASHER, SPECIAL		1				
8	90387–06027	COLLAR		2				
9	97007–06030	BOLT		2				
10	92907–06600	WASHER, PLATE		2				
11	90159–06005	SCREW, WITH WASHER		2				
12	5EB–24183–00	DAMPER, LOCATING 3		2				
13	90387–061W6	COLLAR		1				
14	91317–06090	BOLT		1				
15	90201–06050	WASHER, PLATE		1				
16	5EB–24182–00	DAMPER, LOCATING 2		2				
17	4TV–24500–00	FUEL COCK ASSY 1		1				
18	3XV–24523–00	.VALVE		1				
19	3XV–24534–00	.SEAL, COCK		1				
20	4X8–24512–00	.O–RING		1				
21	90149–06008	SCREW		2				
22	90202–05193	WASHER, PLATE		2				
23	5EB–24311–00	PIPE, FUEL 1		1				
24	5EB–24312–00	PIPE 2		1				
25	90467–14057	CLIP		4				

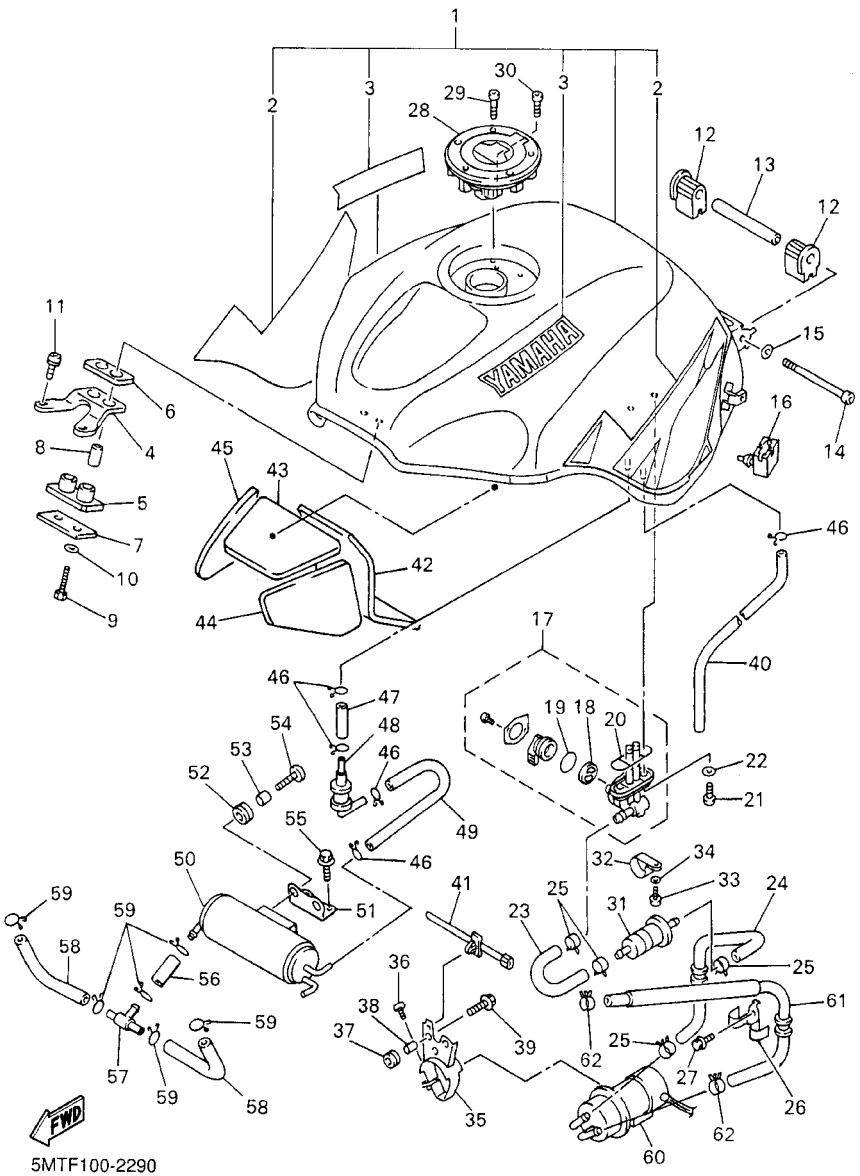

FIG. 29 FUEL TANK 2

REF. NO.	PART NO.	DESCRIPTION	5MTF	5MTG	5MTH			REMARKS
26	5EB–2417H–00	CLAMP 1		1				
27	95027–06012	BOLT, FLANGE		1				
28	5JJ–24602–00	CAP ASSY		1				
29	90110–05112	BOLT, HEXAGON SOCKET HEAD		3				
30	91317–05010	BOLT		1				
31	4TV–24560–00	FILTER ASSY		1				
32	1AE–24366–00	CLAMP, FUEL PIPE 1		1				
33	98507–06012	SCREW, PAN HEAD		1				
34	92907–06600	WASHER, PLATE		1				
35	5EB–24491–00	BRACKET, FUEL PUMP		1				
36	98507–05010	SCREW, PAN HEAD		1				
37	90480–13163	GROMMET		2				
38	90387–060G7	COLLAR		2				
39	90119–06096	BOLT, WITH WASHER		2				
40	90445–102G9	HOSE (L650)		1				
41	90464–12089	CLAMP		1				
42	5EB–2414K–00	DAMPER, PLATE 3		1				
43	5EB–2414H–00	DAMPER, PLATE 1		1				
44	5EB–2411J–00	DAMPER, SIDE COVER		1				
45	5EB–2414J–00	DAMPER, PLATE 2		1				
46	90467–10008	CLIP		5				
47	4DU–24321–00	PIPE 10		1				
48	3UH–24180–00	ROLL OVER VALVE ASSY		1				
49	5GV–24314–00	PIPE 4		1				
50	5GV–24170–00	CANISTER ASSY		1				
51	5GV–2419F–00	BRACKET, CANISTOR		1				
52	90480–13018	GROMMET		2				

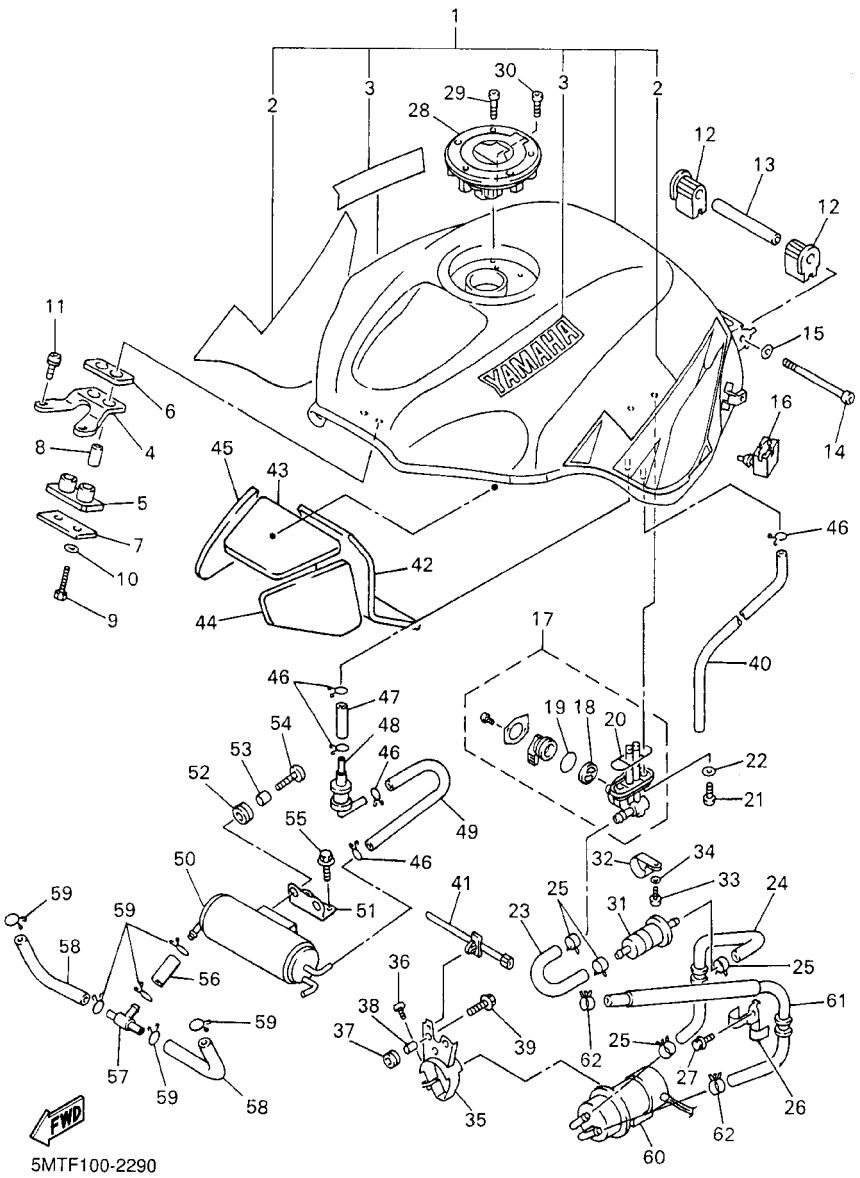

FIG. 29 FUEL TANK 2

REF. NO.	PART NO.	DESCRIPTION	5MTF	5MTG	5MTH			REMARKS
53	90387–062L2	COLLAR		2				
54	90110–06200	BOLT, HEXAGON SOCKET HEAD		2				
55	95027–06014	BOLT, FLANGE		2				
56	5GV–14149–00	PIPE		1				
57	3H3–24376–00	PIPE, JOINT 1		1				
58	5GV–14465–00	PIPE		2				
59	90467–10008	CLIP		6				
60	5EB–13907–01	FUEL PUMP COMP.		1				
61	5EB–14294–00	HOSE		1				
62	90467–11044	CLIP		2				

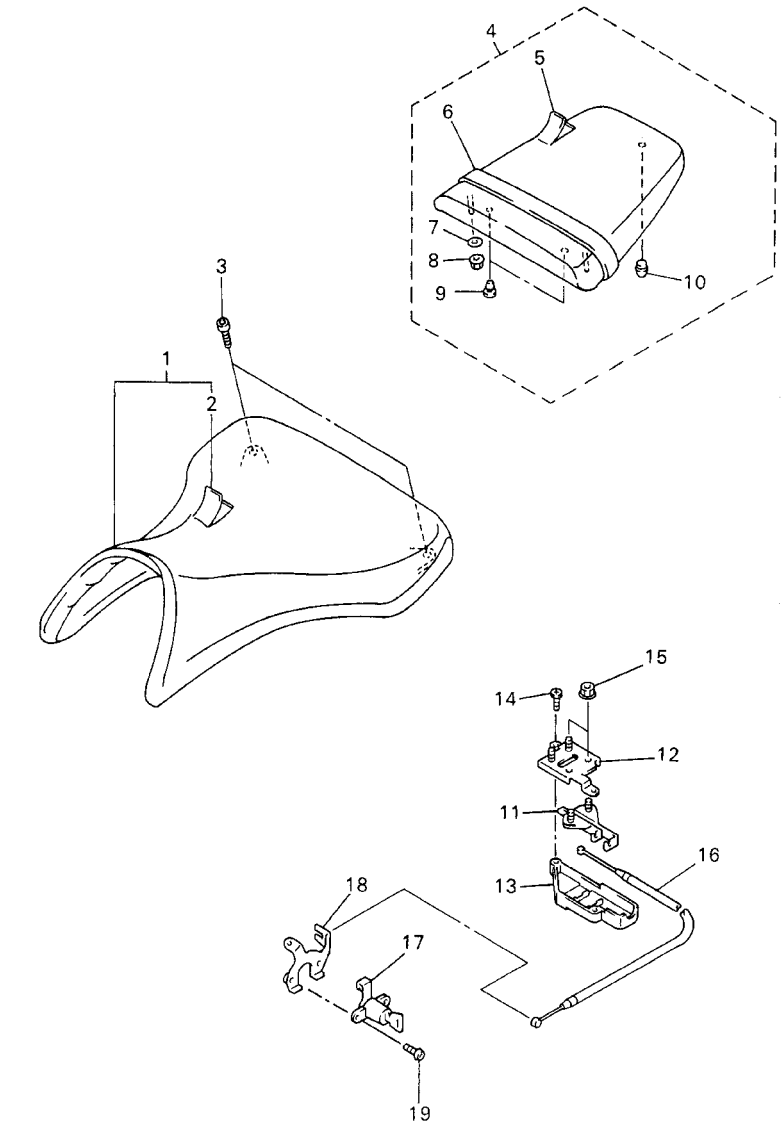

5MT3351-1270

FIG. 30 SEAT

REF. NO.	PART NO.	DESCRIPTION	5MTF	5MTG	5MTH			REMARKS
1	5EB–24710–00	SINGLE SEAT ASSY	1	1	1			
2	5EB–2470F–00	.COVER, SEAT	1	1	1			
3	90110–06258	BOLT, HEXAGON SOCKET HEAD	2	2	2			
4	5MT–24750–02	TANDEM SEAT ASSY	1	1	1			
5	5EB–24751–00	.COVER, TANDEM SEAT	1	1	1			
6	5MT–24720–00	.SEAT BAND ASSY	1	1	1			
7	90201–06008	.WASHER, PLATE	2	2	2			
8	90179–06635	.NUT	2	2	2			
9	90338–06018	.PLUG	2	2	2			
10	4G0–21639–00	.DAMPER 2	1	1	1			
11	4BP–24780–00	SEAT LOCK ASSY	1	1	1			
12	5JJ–24792–01	PLATE	1	1	1			
13	5JJ–2475X–01	COVER,2	1	1	1			
14	97707–40012	SCREW, TAPPING	2	2	2			
15	95707–06500	NUT, FLANGE	4	4	4			
16	5MT–2478E–00	CABLE, SEAT LOCK	1	1	1			
17	2TV–W2470–00	SEAT LOCK ASSY	1	1	1			
18	4XV–2117K–00	STAY, LOCK	1	1	1			
19	90149–06308	SCREW	2	2	2			

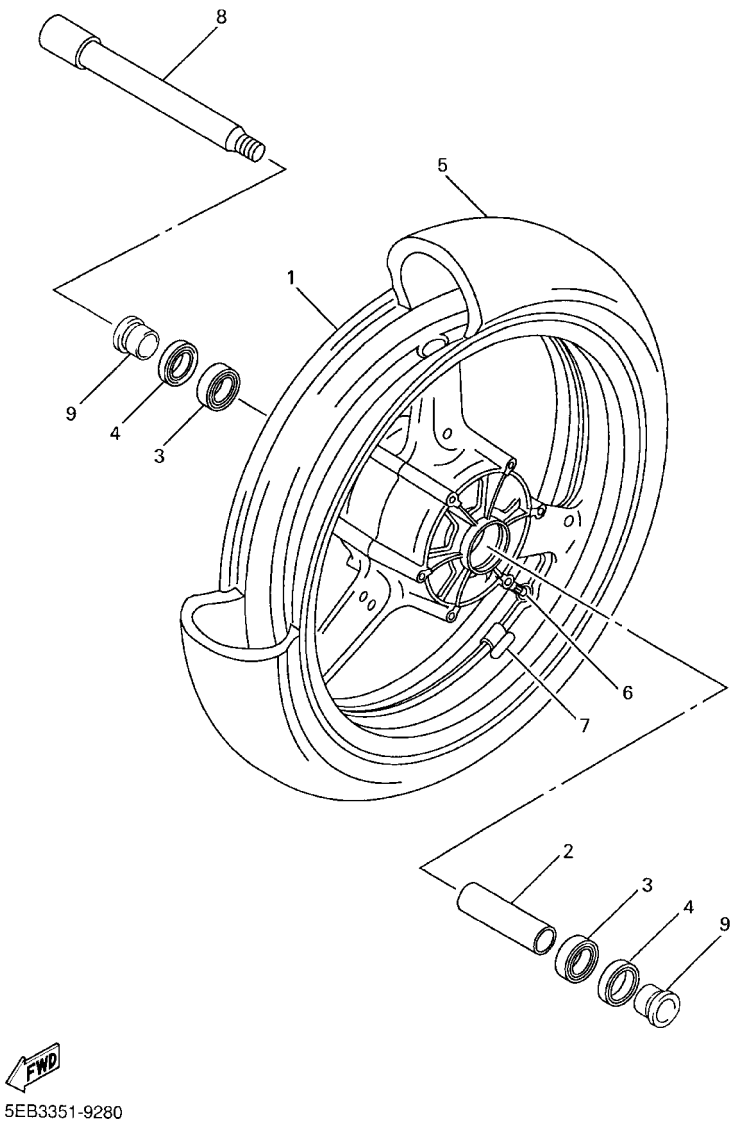

FIG. 31 FRONT WHEEL

REF. NO.	PART NO.	DESCRIPTION	5MTF	5MTG	5MTH			REMARKS
1	4XV–25168–00–33	CAST WHEEL, FRONT	1	1	1			YB
2	4XV–25117–00	SPACER, BEARING	1	1	1			
3	93306–00420	BEARING (B6004)	2	2	2			
4	93106–28043	OIL SEAL	2	2	2			
5	94112–17019	TIRE (120/60ZR17 D207FJ)	1	1	1			DUNLOP
6	93900–00030	VALVE, RIM	1	1	1			
7	5MT–25398–00	BALANCER, WHEEL (10G)	1	1	1			UR
	5MT–25398–10	BALANCER, WHEEL (20G)	1	1	1			UR
	5MT–25398–20	BALANCER, WHEEL (30G)	1	1	1			UR
8	4XV–25181–00	AXLE, WHEEL	1	1	1			
9	90387–2200T	COLLAR	2	2	2			

FIG. 32 FRONT BRAKE CALIPER

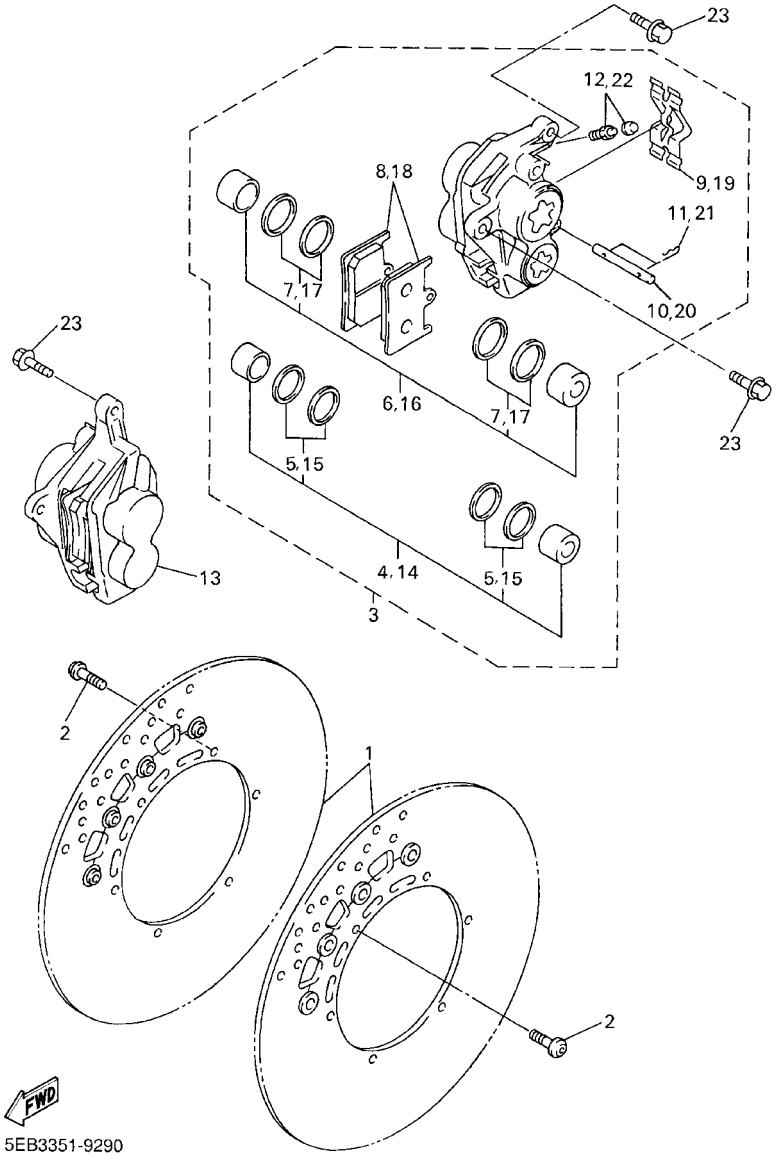

REF. NO.	PART NO.	DESCRIPTION	5MTF	5MTG	5MTH			REMARKS
1	4SV–2581T–00	DISC BRAKE ASSY	2	2	2			
2	90109–064G6	BOLT	12	12	12			
3	5DM–2580T–00	CALIPER ASSY (LEFT)	1	1	1			
4	4SV–W0057–00	.PISTON ASSY, CALIPER	1	1	1			
5	3MA–W0047–10	..CALIPER SEAL KIT	1	1	1			
6	4SV–W0057–10	.PISTON ASSY, CALIPER	1	1	1			
7	3GM–W0047–10	..CALIPER SEAL KIT	1	1	1			
8	4SV–W0045–00	.BRAKE PAD KIT	1	1	1			
9	4SV–25919–00	.SUPPORT, PAD	1	1	1			
10	4SV–25924–00	.PIN, PAD	1	1	1			
11	3GM–25925–00	.CLIP	2	2	2			
12	1J3–W0048–00	.BLEED SCREW KIT	1	1	1			
13	5DM–2580U–00	CALIPER ASSY (RIGHT)	1	1	1			
14	4SV–W0057–00	.PISTON ASSY, CALIPER	1	1	1			
15	3MA–W0047–10	..CALIPER SEAL KIT	1	1	1			
16	4SV–W0057–10	.PISTON ASSY, CALIPER	1	1	1			
17	3GM–W0047–10	..CALIPER SEAL KIT	1	1	1			
18	4SV–W0045–00	.BRAKE PAD KIT	1	1	1			
19	4SV–25919–00	.SUPPORT, PAD	1	1	1			
20	4SV–25924–00	.PIN, PAD	1	1	1			
21	3GM–25925–00	.CLIP	2	2	2			
22	1J3–W0048–00	.BLEED SCREW KIT	1	1	1			
23	90105–105A7	BOLT, FLANGE	4	4	4			

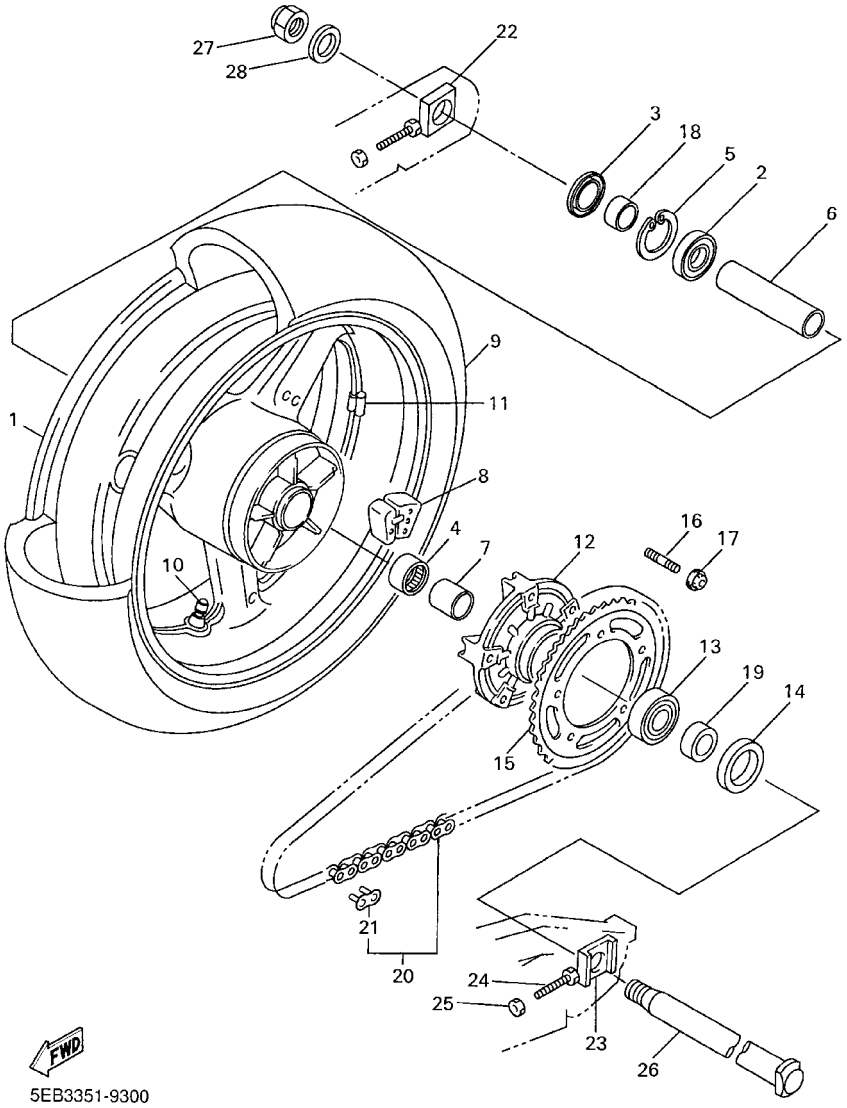

FIG. 33 REAR WHEEL

REF. NO.	PART NO.	DESCRIPTION	5MTF	5MTG	5MTH			REMARKS
1	5EB–25338–00–33	CAST WHEEL, REAR	1	1	1			YB
2	93306–07806	BEARING	1	1	1			
3	93106–35042	OIL SEAL	1	1	1			
4	93317–43580	BEARING	1	1	1			
5	99009–52500	CIRCLIP	1	1	1			
6	4XV–25317–00	SPACER, BEARING	1	1	1			
7	4XV–25383–00	COLLAR, WHEEL	1	1	1			
8	5EB–25364–01	DAMPER	5	5	5			
9	94118–17011	TIRE (180/55ZR17 D207N)	1	1	1			DUNLOP
10	93900–00030	VALVE, RIM	1	1	1			
11	5MT–25398–00	BALANCER, WHEEL (10G)	1	1	1			UR
	5MT–25398–10	BALANCER, WHEEL (20G)	1	1	1			UR
	5MT–25398–20	BALANCER, WHEEL (30G)	1	1	1			UR
12	5EB–25366–01	CLUTCH, HUB	1	1	1			
13	93306–27802	BEARING	1	1	1			
14	93106–40041	OIL SEAL	1	1	1			
15	5EB–25448–20	SPROCKET, DRIVEN (48T)	1		1			
	5GV–25446–20	SPROCKET, DRIVEN (46T)		1				
16	90116–10485	BOLT, STUD	5	5	5			
17	95607–10200	NUT, SELF–LOCKING	5	5	5			
18	5EB–25377–00	COLLAR, WHEEL	1	1	1			
19	5EB–25376–00	COLLAR, WHEEL	1	1	1			
20	9Y581–55115	CHAIN (DID532ZLVKA1–L116)	1	1	1			
21	94681–55031	.JOINT, CHAIN	1	1	1			
22	5EB–25388–00	PULLER, CHAIN 1	1	1	1			
23	5EB–25389–00	PULLER, CHAIN 2	1	1	1			
24	90101–08766	BOLT	2	2	2			

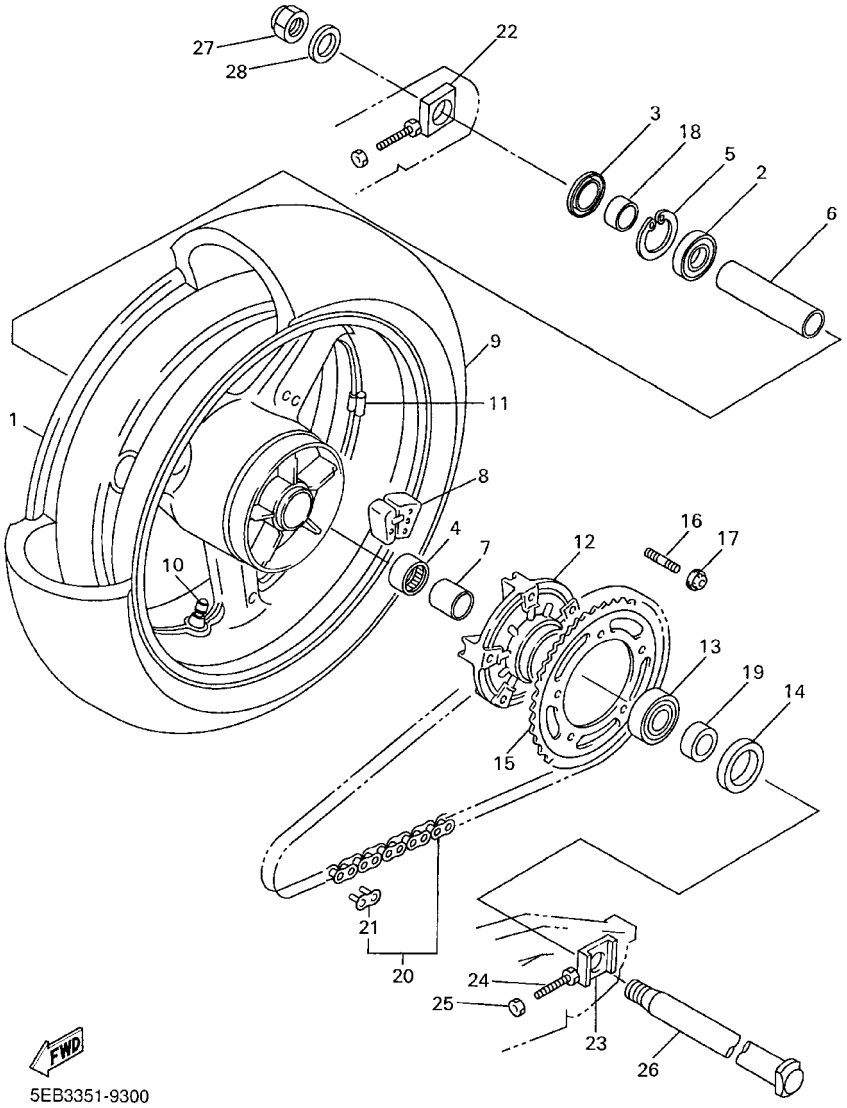

FIG. 33 REAR WHEEL

REF. NO.	PART NO.	DESCRIPTION	5MTF	5MTG	5MTH			REMARKS
25	95307–08600	NUT	2	2	2			
26	4XV–25381–00	AXLE, WHEEL	1	1	1			
27	90185–24165	NUT, SELF–LOCKING	1	1	1			
28	90201–257R5	WASHER, PLATE	1	1	1			

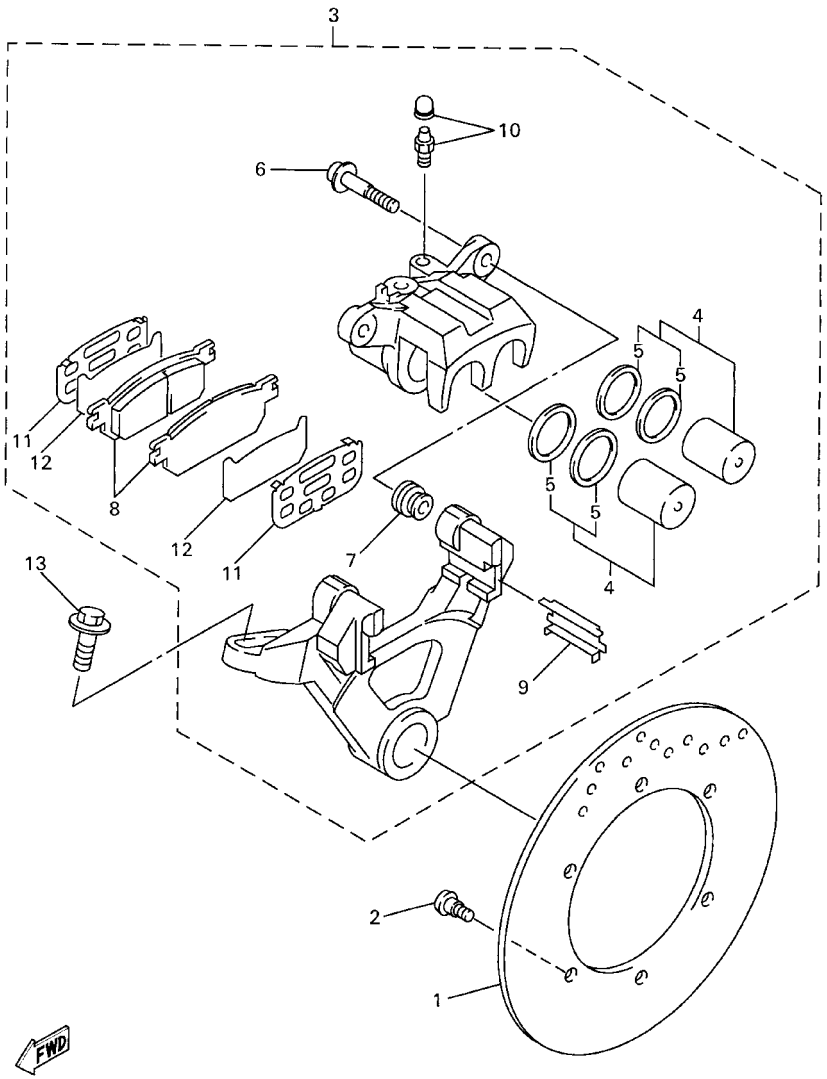

5EB3351-9310

FIG. 34 REAR BRAKE CALIPER

REF. NO.	PART NO.	DESCRIPTION	5MTF	5MTG	5MTH			REMARKS
1	5EB–2582W–00	DISC, REAR BRAKE 2	1	1	1			
2	90109–064G6	BOLT	6	6	6			
3	5EB–2580W–00	CALIPER ASSY, REAR 2	1	1	1			
4	4JG–W0057–00	.PISTON ASSY, CALIPER	1	1	1			
5	4JG–W0047–00	..CALIPER SEAL KIT	1	1	1			
6	5JW–25914–00	.PIN, SLIDE	2	2	2			
7	4TT–25937–00	.BOOT 2	2	2	2			
8	5EB–W0046–00	.BRAKE PAD KIT 2	1	1	1			
9	4TT–25919–00	.SUPPORT, PAD	2	2	2			
10	51L–W0048–00	.BLEED SCREW KIT	1	1	1			
11	5CG–25828–C0	.SHIM, CALIPER	2	2	2			
12	5EB–25828–00	.SHIM, CALIPER	2	2	2			
13	90105–08386	BOLT, FLANGE	1	1	1			

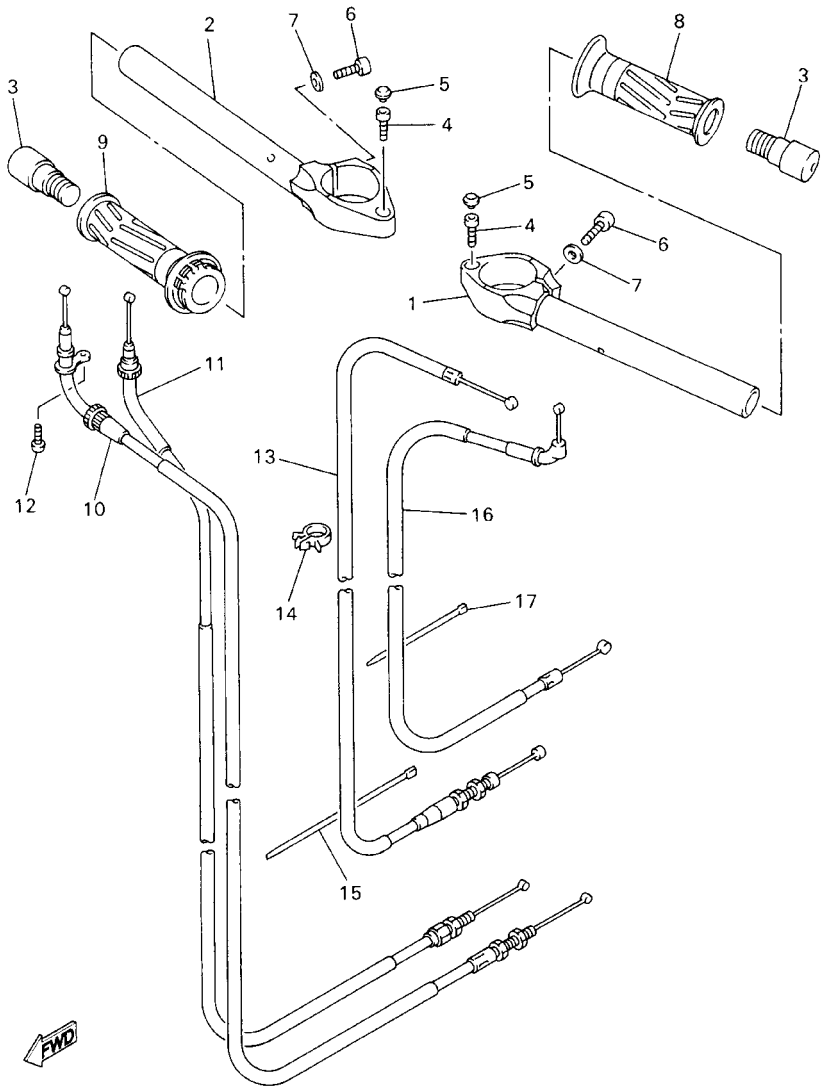

FIG. 35 STEERING HANDLE. CABLE

REF. NO.	PART NO.	DESCRIPTION	5MTF	5MTG	5MTH			REMARKS
1	5MT–26121–00	HANDLEBAR (LEFT)	1	1	1			
2	5MT–26122–00	HANDLEBAR (RIGHT)	1	1	1			
3	5EB–26246–00	END, GRIP	2	2	2			
4	91317–06020	BOLT	2	2	2			
5	2H9–23469–00	CAP, BOLT	2	2	2			
6	91314–08030	BOLT	2	2	2			
7	90201–086J0	WASHER, PLATE	2	2	2			
8	4YR–26241–01	GRIP	1	1	1			
9	5EB–26240–00	GRIP ASSY	1	1	1			
10	5EB–26311–00	CABLE, THROTTLE 1	1	1	1			
11	5EB–26312–00	CABLE, THROTTLE 2	1	1	1			
12	98507–05010	SCREW, PAN HEAD	1	1	1			
13	5EB–26335–00	CABLE, CLUTCH	1	1	1			
14	90464–15157	CLAMP	1	1	1			
15	90464–15195	CLAMP	1	1	1			
16	5EB–26331–00	CABLE, STARTER 1	1	1	1			
17	90464–13077	CLAMP	1	1	1			

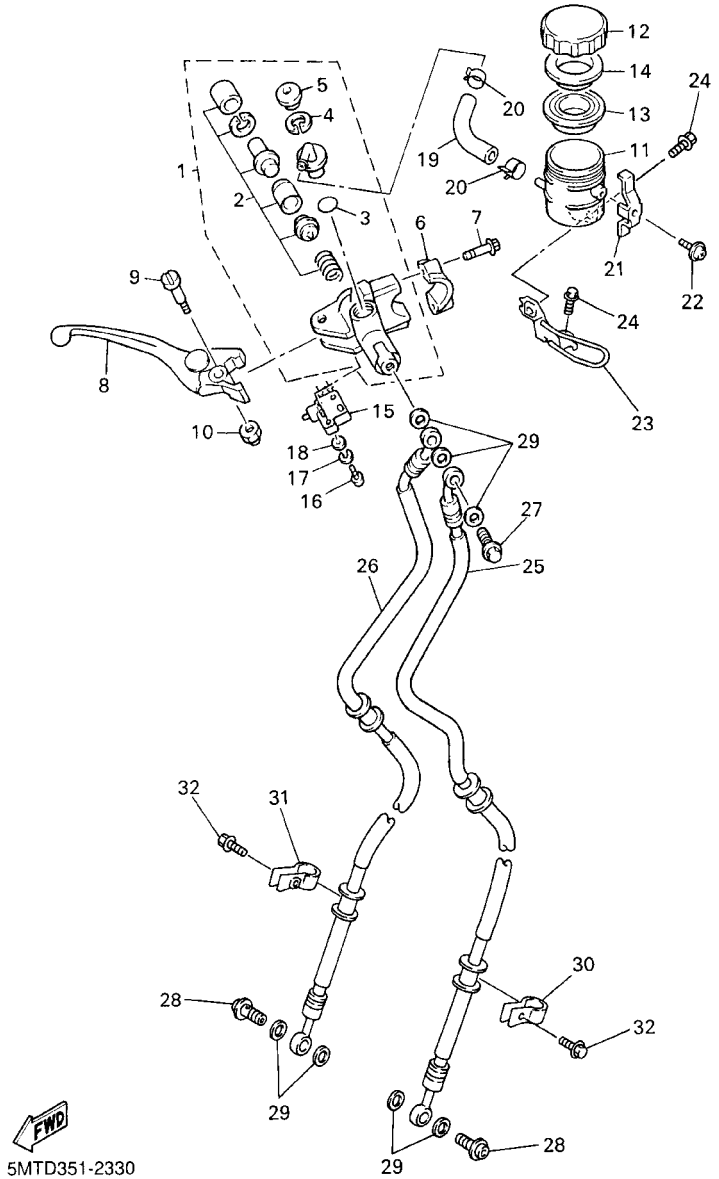

FIG. 36 FRONT MASTER CYLINDER

REF. NO.	PART NO.	DESCRIPTION	5MTF	5MTG	5MTH			REMARKS
1	5EB–W2587–01	MASTER CYLINDER SUB ASSY	1	1	1			
2	5MT–W0041–00	.CYLINDER KIT, MASTER	1	1	1			
3	93210–15620	.O–RING	1	1	1			
4	2VN–25866–00	.CIRCLIP	1	1	1			
5	3FV–2589A–00	.COVER, DUST	1	1	1			
6	56A–25867–00	BRACKET, MASTER CYLINDER	1	1	1			
7	5EB–26332–00	BOLT	2	2	2			
8	5EB–83922–01	LEVER 2	1	1	1			
9	3FV–2589F–00	BOLT, LEVER	1	1	1			
10	95606–06100	NUT, U	1	1	1			
11	3FV–25894–00	TANK, RESERVOIR	1	1	1			
12	3GM–25852–50	CAP, RESERVOIR	1	1	1			
13	3FV–25854–00	DIAPHRAGM, RESERVOIR	1	1	1			
14	2J2–25855–50	BUSH,DIAPHRAGM	1	1	1			
15	4HM–83980–00	FRONT STOP SWITCH ASSY	1	1	1			
16	98502–04012	SCREW, PAN HEAD	1	1	1			
17	92902–04100	WASHER, SPRING	1	1	1			
18	92902–04600	WASHER, PLATE	1	1	1			
19	5EB–2582F–00	HOSE	1	1	1			
20	90467–12085	CLIP	2	2	2			
21	3FV–2589G–00	HOLDER	1	1	1			
22	3GM–2589H–00	SCREW	1	1	1			
23	5MT–26292–00	STAY	1	1	1			
24	95027–06012	BOLT, FLANGE	2	2	2			
25	5EB–25872–00	HOSE, BRAKE 1	1	1	1			
26	5EB–25873–00	HOSE, BRAKE 2	1	1	1			
27	90401–10160	BOLT, UNION	1	1	1			

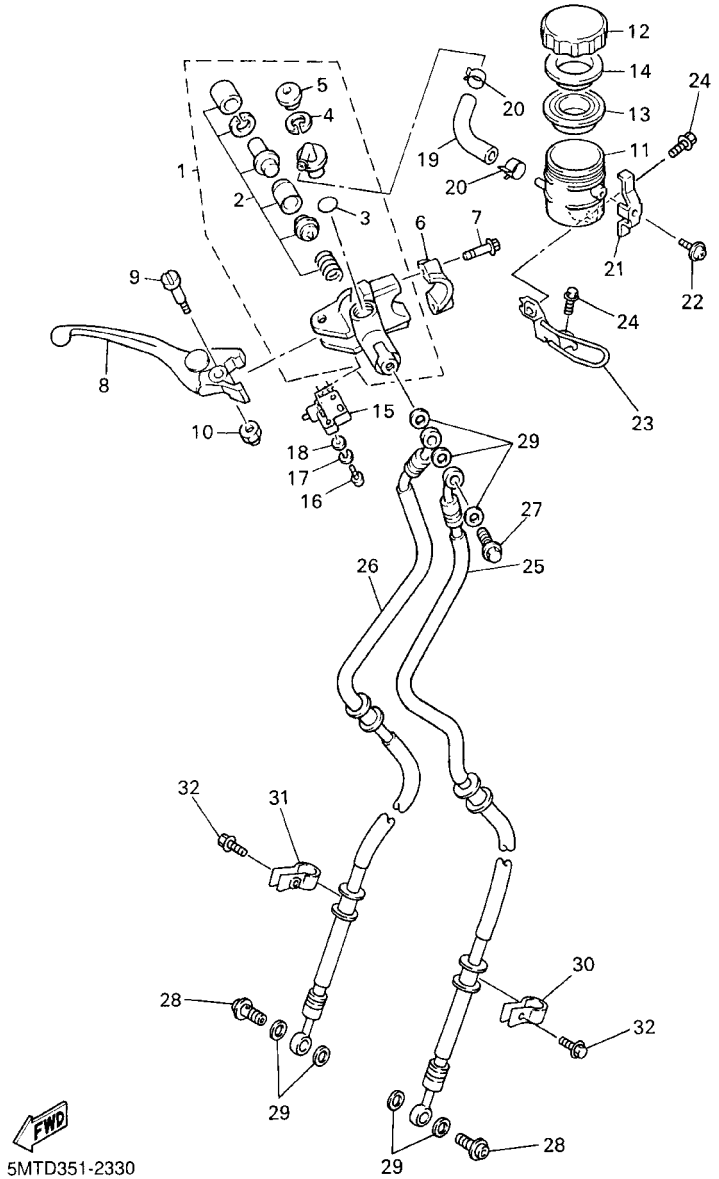

FIG. 36 FRONT MASTER CYLINDER

REF. NO.	PART NO.	DESCRIPTION	5MTF	5MTG	5MTH			REMARKS
28	90401–10172	BOLT, UNION	2	2	2			
29	90201–10118	WASHER, PLATE	7	7	7			
30	3EN–25875–01	HOLDER, BRAKE HOSE 1	1	1	1			
31	2R8–25876–01	HOLDER, BRAKE HOSE 2	1	1	1			
32	95027–06020	BOLT, FLANGE	2	2	2			

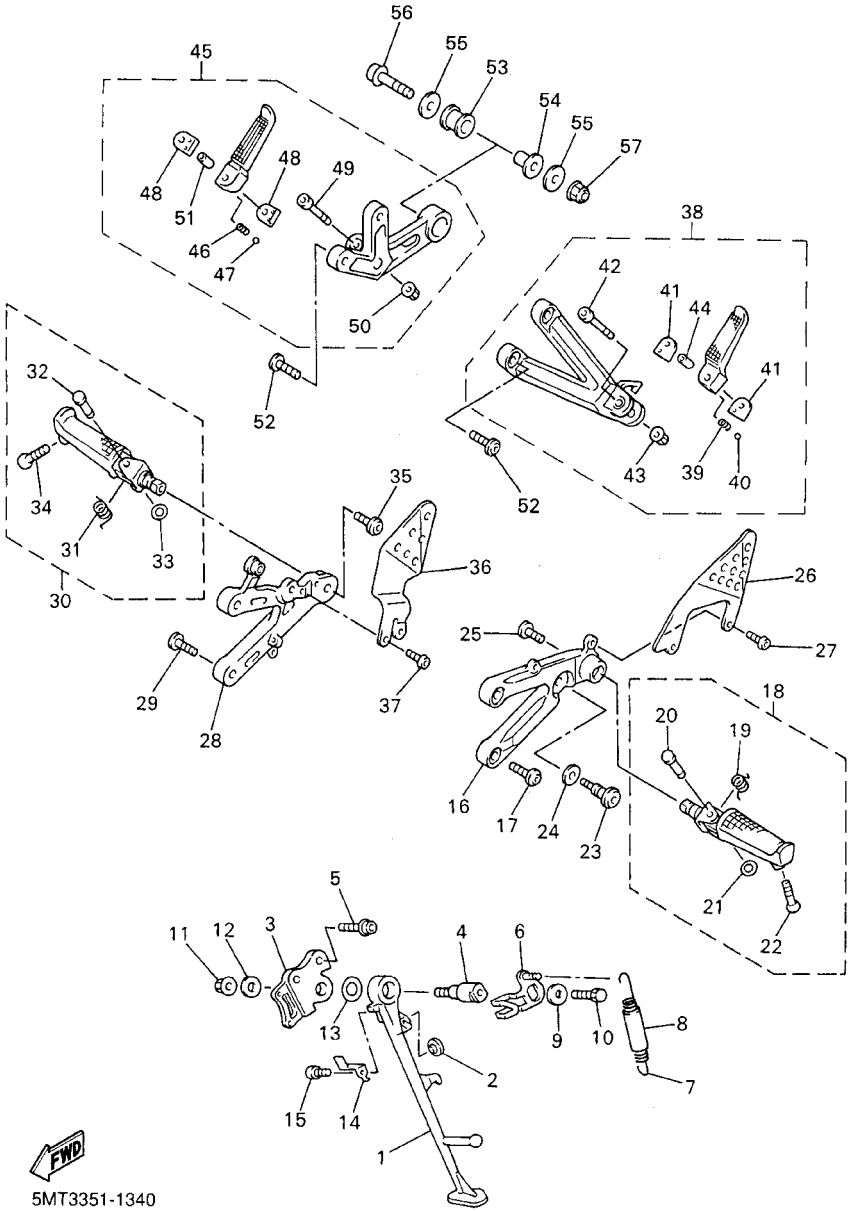

FIG. 37 STAND. FOOTREST

REF. NO.	PART NO.	DESCRIPTION	5MTF	5MTG	5MTH			REMARKS
1	5EB–27311–00	STAND, SIDE	1	1	1			
2	128–27114–00	STOPPER, MAIN STAND	1	1	1			
3	5JJ–27321–00	BRACKET, SIDE STAND	1	1	1			
4	4NX–27351–00	GUIDE, SIDE STAND	1	1	1			
5	90109–105G7	BOLT	2	2	2			
6	5GV–27352–00	HOOK, SIDE STAND	1	1	1			
7	90506–18003	SPRING, TENSION	1	1	1			
8	90445–19002	HOSE (L60)	1	1	1			
9	90201–081R9	WASHER, PLATE	1	1	1			
10	90101–08662	BOLT	1	1	1			
11	95607–10200	NUT, SELF–LOCKING	1	1	1			
12	90201–101J1	WASHER, PLATE	1	1	1			
13	90201–146F9	WASHER, PLATE	1	1	1			
14	5JJ–27315–00	LINK, SIDE STAND	1	1	1			
15	90110–06226	BOLT, HEXAGON SOCKET HEAD	1	1	1			
16	5EB–27442–00	BRACKET 2	1	1	1			
17	90109–085G6	BOLT	2	2	2			
18	5MT–27410–00	FRONT FOOTREST ASSY (LEFT)	1	1	1			
19	90508–183B9	.SPRING, TORSION	1	1	1			
20	90243–08029	.PIN	1	1	1			
21	90201–06042	.WASHER, PLATE	1	1	1			
22	90109–08018	.BOLT	1	1	1			
23	4BP–27434–01	BOLT	1	1	1			
24	90201–08326	WASHER, PLATE	1	1	1			
25	90109–103A9	BOLT	1	1	1			
26	5EB–27445–01	PLATE 1	1	1	1			
27	90111–06003	BOLT	2	2	2			

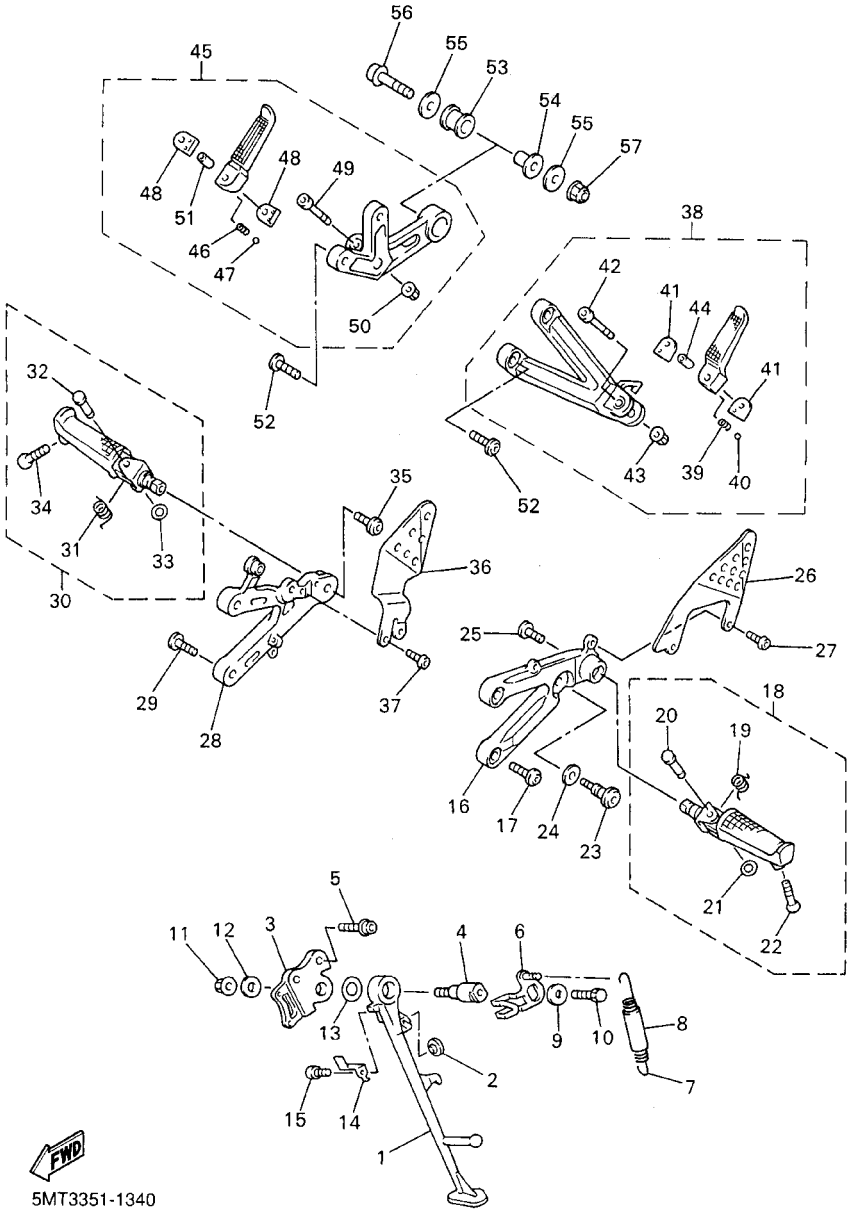

FIG. 37 STAND. FOOTREST

REF. NO.	PART NO.	DESCRIPTION	5MTF	5MTG	5MTH			REMARKS
28	5EB–27443–00	BRACKET 3	1	1	1			
29	90109–085G6	BOLT	2	2	2			
30	5MT–27420–00	FRONT FOOTREST ASSY (RIGHT)	1	1	1			
31	90508–184B0	.SPRING, TORSION	1	1	1			
32	90243–08029	.PIN	1	1	1			
33	90201–06042	.WASHER, PLATE	1	1	1			
34	90109–08018	.BOLT	1	1	1			
35	90109–103A9	BOLT	1	1	1			
36	5EB–27446–01	PLATE 2	1	1	1			
37	90111–06003	BOLT	2	2	2			
38	5EB–27430–00	REAR FOOTREST ASSY 1	1	1	1			
39	90501–12743	.SPRING, COMPRESSION	1	1	1			
40	93501–04011	.BALL	1	1	1			
41	1HX–27437–00	.WASHER, SPECIAL	2	2	2			
42	91314–06045	.BOLT	1	1	1			
43	95604–06200	.NUT, U FLANGE	1	1	1			
44	90387–064H8	.COLLAR	1	1	1			
45	5EB–27440–00	REAR FOOTREST ASSY 2	1	1	1			
46	90501–12743	.SPRING, COMPRESSION	1	1	1			
47	93501–04011	.BALL	1	1	1			
48	1HX–27437–00	.WASHER, SPECIAL	2	2	2			
49	91314–06045	.BOLT	1	1	1			
50	95604–06200	.NUT, U FLANGE	1	1	1			
51	90387–064H8	.COLLAR	1	1	1			
52	90109–085G6	BOLT	4	4	4			
53	36Y–27424–00	DAMPER, FOOTREST 2	1	1	1			
54	90387–10636	COLLAR	1	1	1			

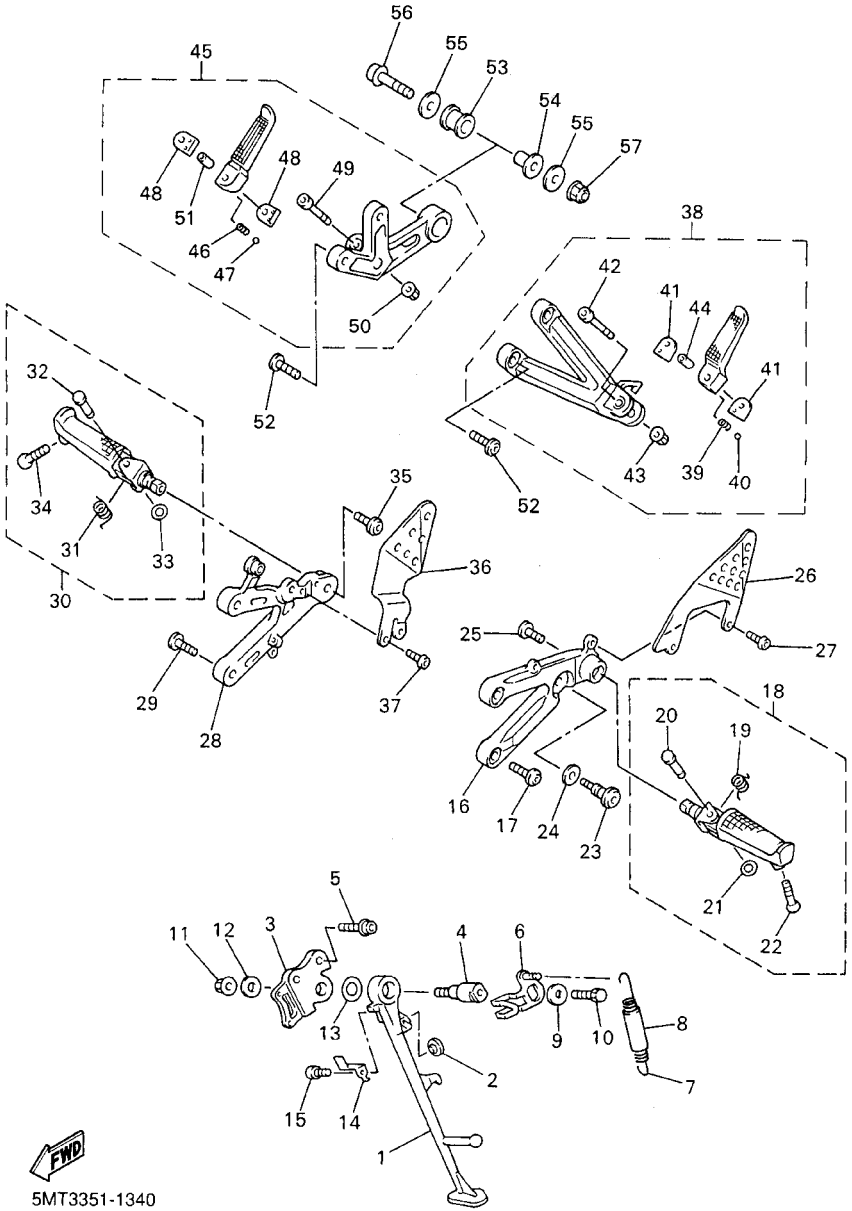

FIG. 37 STAND. FOOTREST

REF. NO.	PART NO.	DESCRIPTION	5MTF	5MTG	5MTH			REMARKS
55	90201–10669	WASHER, PLATE	2	2	2			
56	90105–10271	BOLT, FLANGE	1	1	1			
57	95607–10200	NUT, SELF–LOCKING	1	1	1			

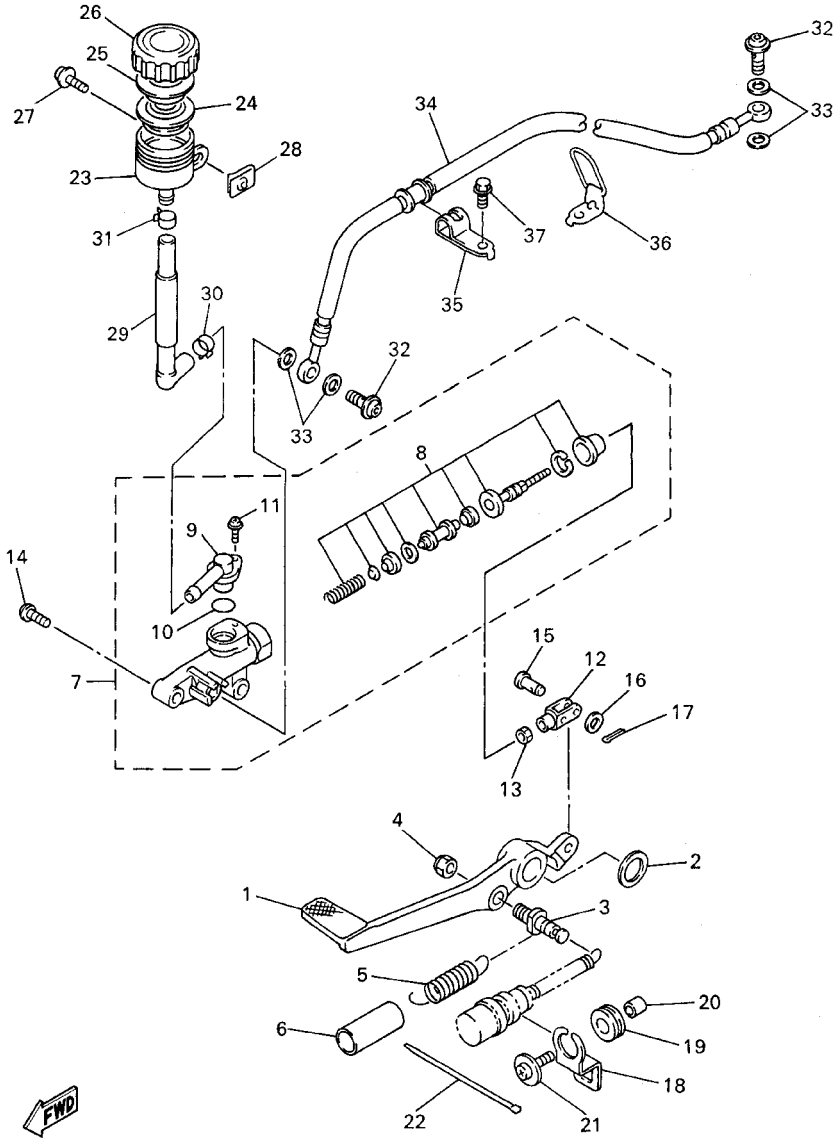

5MT3351-1350

FIG. 38 REAR MASTER CYLINDER

REF. NO.	PART NO.	DESCRIPTION	5MTF	5MTG	5MTH			REMARKS
1	5EB–27211–01	PEDAL, BRAKE	1	1	1			
2	90206–17084	WASHER, WAVE	1	1	1			
3	5EB–27813–00	PIN, PEDAL CRANK	1	1	1			
4	95604–08100	NUT, U	1	1	1			
5	90506–20193	SPRING, TENSION	1	1	1			
6	90446–15386	HOSE	1	1	1			
7	3TU–2583V–01	RR. MASTER CYLINDER ASSY.	1	1	1			
8	3TU–W0042–51	.CYLINDER KIT, MASTER	1	1	1			
9	3LN–2582A–00	.JOINT	1	1	1			
10	3LN–2585F–00	.O–RING	1	1	1			
11	3LN–2585H–00	.SCREW,SET	1	1	1			
12	4XV–27222–01	JOINT	1	1	1			
13	95307–08700	NUT	1	1	1			
14	92017–08030	BOLT, BUTTON HEAD	2	2	2			
15	91701–06018	PIN, CLEVIS	1	1	1			
16	92907–06200	WASHER	1	1	1			
17	91401–16012	PIN, COTTER	1	1	1			
18	5EB–2144G–00	STAY, STOP SWITCH	1	1	1			
19	90480–12607	GROMMET	1	1	1			
20	90387–06023	COLLAR	1	1	1			
21	90159–06150	SCREW, WITH WASHER	1	1	1			
22	5Y9–12491–00	CLAMP 1	1	1	1			
23	5JJ–25894–00	TANK, RESERVOIR	1	1	1			
24	2VN–25854–00	DIAPHRAGM, RESERVOIR	1	1	1			
25	2VN–25855–00	BUSH,DIAPHRAGM	1	1	1			
26	3XP–25852–50	CAP, RESERVOIR	1	1	1			
27	90159–06056	SCREW, WITH WASHER	1	1	1			

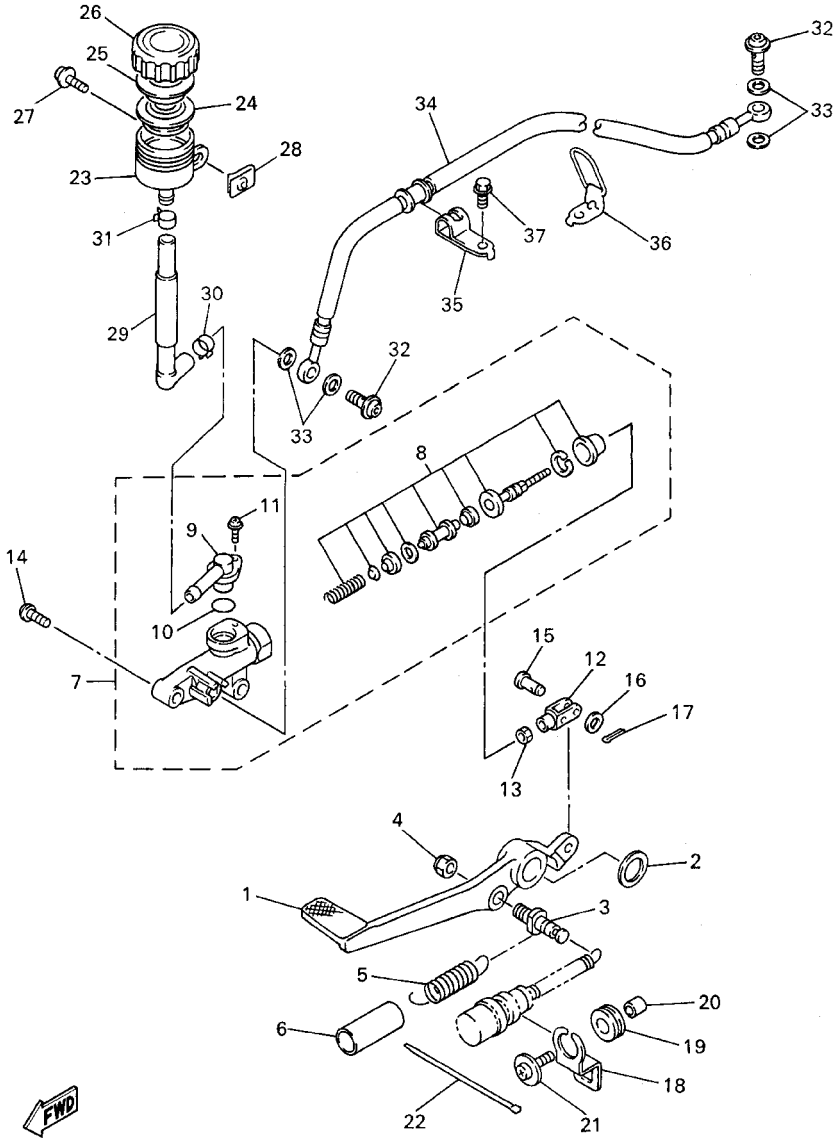

5MT3351-1350

FIG. 38 REAR MASTER CYLINDER

REF. NO.	PART NO.	DESCRIPTION	5MTF	5MTG	5MTH			REMARKS
28	90183–06053	NUT, SPRING	1	1	1			
29	5MT–25895–00	HOSE, RESERVOIR	1	1	1			
30	90467–14057	CLIP	1	1	1			
31	90467–12191	CLIP	1	1	1			
32	90401–10172	BOLT, UNION	2	2	2			
33	90201–10118	WASHER, PLATE	4	4	4			
34	5EB–25874–00	HOSE, BRAKE	1	1	1			
35	5EB–25886–01	HOLDER, BRAKE HOSE	1	1	1			
36	5MT–25887–01	HOLDER, BRAKE HOSE	1	1	1			
37	90105–06718	BOLT, FLANGE	1	1	1			

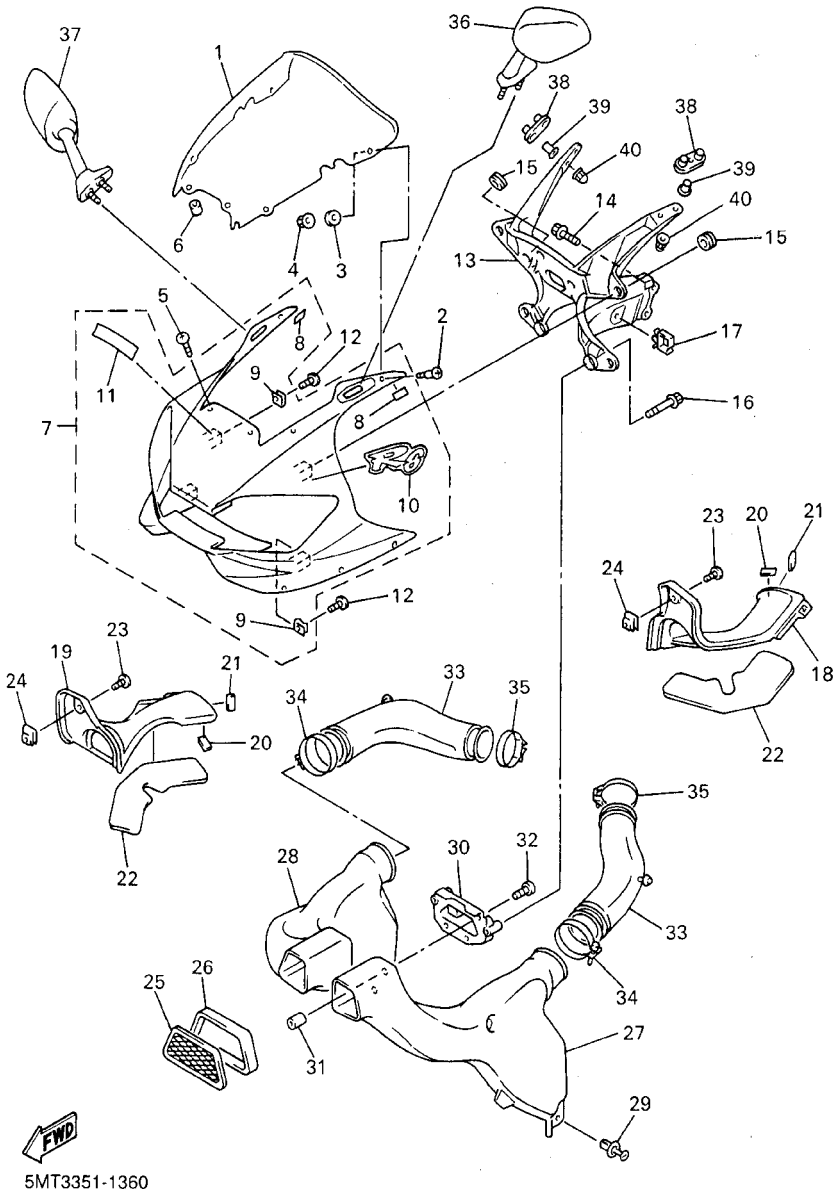

FIG. 39 COWLING 1

REF. NO.	PART NO.	DESCRIPTION	5MTF	5MTG	5MTH			REMARKS
1	5EB–28381–10	WINDSHIELD	1	1	1			
2	90149–05273	SCREW	2	2	2			
3	4FM–28215–00	WASHER, SPECIAL	2	2	2			
4	95707–05500	NUT, FLANGE	2	2	2			
5	90150–05023	SCREW, ROUND HEAD	4	4	4			
6	90179–05523	NUT	4	4	4			
7	5EB–Y283G–B0–P0	BODY, FRONT UPPER 1	1	1	1			UR DPBMC
	5EB–Y283G–50–1X	BODY, FRONT UPPER 1	1	1	1			UR VRC1/BL2
8	3TU–2178A–00	.LABEL	2	2	2			
9	90183–05074	.NUT, SPRING	5	5	5			
10	5EB–28315–80	.EMBLEM	1	1	1			UR FOR DPBMC
	5EB–28315–40	.EMBLEM	1	1	1			UR FOR VRC1
11	99241–00080	.EMBLEM, YAMAHA	1	1	1			
12	90154–05005	SCREW, BINDING	5	5	5			
13	5EB–28356–01	STAY 1	1	1	1			
14	95824–08025	BOLT, FLANGE	2	2	2			
15	4XV–83513–00	DAMPER	7	7	7			
16	95024–06016	BOLT, FLANGE	2	2	2			
17	90464–16025	CLAMP	1	1	1			
18	5EB–2837L–00	PANEL, CONSOLE 1	1	1	1			
19	5EB–2837M–00	PANEL, CONSOLE 2	1	1	1			
20	51Y–21639–00	DAMPER 2	2	2	2			
21	27V–24184–00	DAMPER, LOCATING 4	2	2	2			
22	5EB–2837J–00	DAMPER 5	2	2	2			
23	90150–05039	SCREW, ROUND HEAD	2	2	2			
24	90183–05024	NUT, SPRING	2	2	2			
25	5EB–2837N–00	GRILL, AIR INTAKE 1	1	1	1			

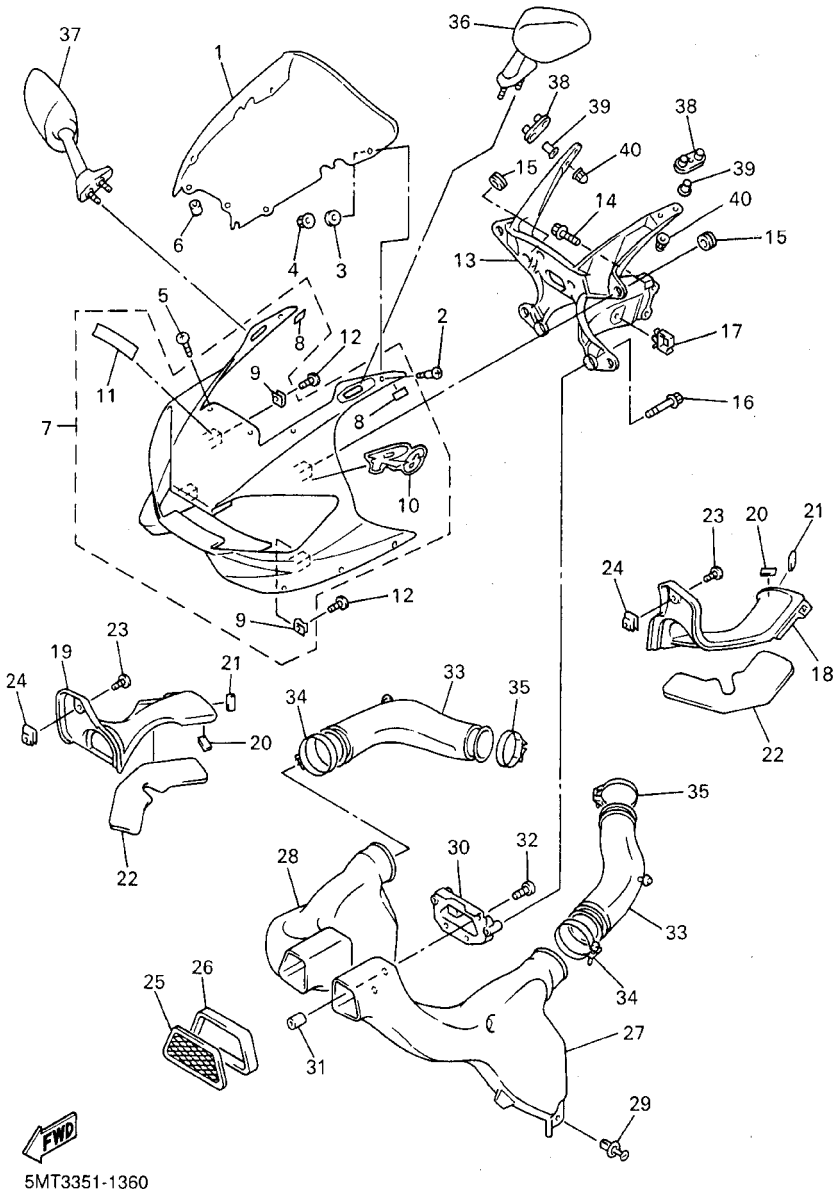

FIG. 39 COWLING 1

REF. NO.	PART NO.	DESCRIPTION	5MTF	5MTG	5MTH			REMARKS
26	5EB–28371–00	DAMPER	1	1	1			
27	5EB–2838R–00	DUCT 2	1	1	1			
28	5EB–2838T–00	DUCT 3	1	1	1			
29	90269–07076	RIVET	2	2	2			
30	5EB–28342–01	JOINT	1	1	1			
31	90179–05523	NUT	4	4	4			
32	98507–05014	SCREW, PAN HEAD	4	4	4			
33	5EB–1446F–00	JOINT, SURGE TANK 1	2	2	2			
34	4TV–13575–00	BAND	2	2	2			
35	90460–59211	CLAMP, HOSE	2	2	2			
36	5MT–26280–00	REAR VIEW MIRROR ASSY(LEFT)	1	1	1			
37	5MT–26290–00	REAR VIEW MIRROR ASSY(RIGHT)	1	1	1			
38	5EB–26298–01	PLATE, MIRROR FITTING 1	2	2	2			
39	90387–0602X	COLLAR	4	4	4			
40	90176–06055	NUT, CROWN	4	4	4			

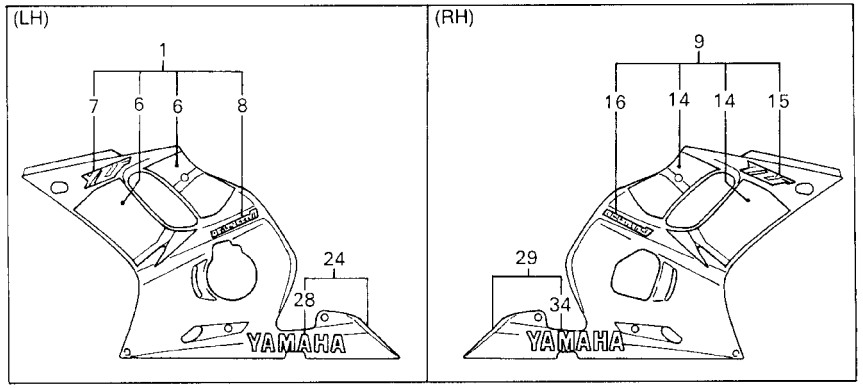

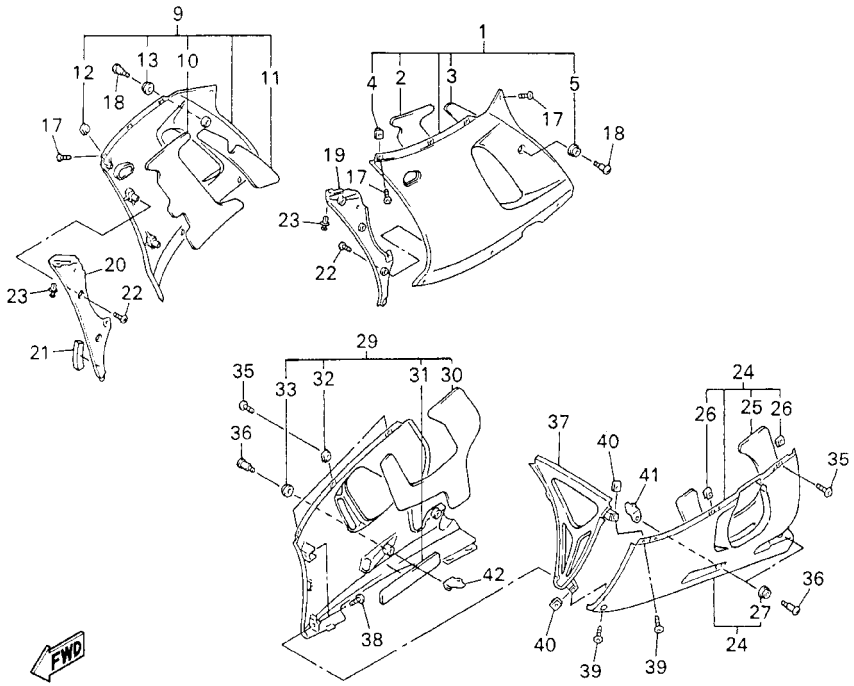

5MTD351-2370

FIG. 40 COWLING 2

REF. NO.	PART NO.	DESCRIPTION	5MTF	5MTG	5MTH			REMARKS
1	5EB–Y283U–A0–P1	PANEL ASSEMBLY 1	1	1	1			UR DPBMC
	5EB–Y283U–90–P3	PANEL ASSEMBLY 1	1	1	1			UR VRC1
2	5EB–28415–00	.DAMPER 1	1	1	1			
3	5EB–28416–00	.DAMPER 2	1	1	1			
4	90183–05024	.NUT, SPRING	3	3	3			
5	90480–13398	.GROMMET	1	1	1			
6	5MT–28301–50	.GRAPHIC SET, LOWER COVER 1	1	1	1			UR FOR DPBMC
	5MT–28301–40	.GRAPHIC SET, LOWER COVER 1	1	1	1			UR FOR VRC1
7	4XV–2839H–70	.EMBLEM 1	1	1	1			UR FOR DPBMC
	4XV–2839H–80	.EMBLEM 1	1	1	1			UR FOR VRC1
8	5EB–28328–60	.EMBLEM	1	1	1			UR FOR DPBMC
	5EB–28328–70	.EMBLEM	1	1	1			UR FOR VRC1
9	5EB–Y283V–B0–P1	PANEL ASSEMBLY 2	1	1	1			UR DPBMC
	5EB–Y283V–A0–P3	PANEL ASSEMBLY 2	1	1	1			UR VRC1
10	5EB–28415–10	.DAMPER 1	1	1	1			
11	5EB–28416–10	.DAMPER 2	1	1	1			
12	90183–05024	.NUT, SPRING	3	3	3			
13	90480–13398	.GROMMET	1	1	1			
14	5MT–28303–50	.GRAPHIC SET, LOWER COVER 2	1	1	1			UR FOR DPBMC
	5MT–28303–40	.GRAPHIC SET, LOWER COVER 2	1	1	1			UR FOR VRC1
15	4XV–2839H–70	.EMBLEM 1	1	1	1			UR FOR DPBMC
	4XV–2839H–80	.EMBLEM 1	1	1	1			UR FOR VRC1
16	5EB–28328–60	.EMBLEM	1	1	1			UR FOR DPBMC
	5EB–28328–70	.EMBLEM	1	1	1			UR FOR VRC1
17	90150–05039	SCREW, ROUND HEAD	8	8	8			
18	90150–06036	SCREW, ROUND HEAD	2	2	2			
19	5EB–2836K–00	PANEL, INNER 1	1	1	1			

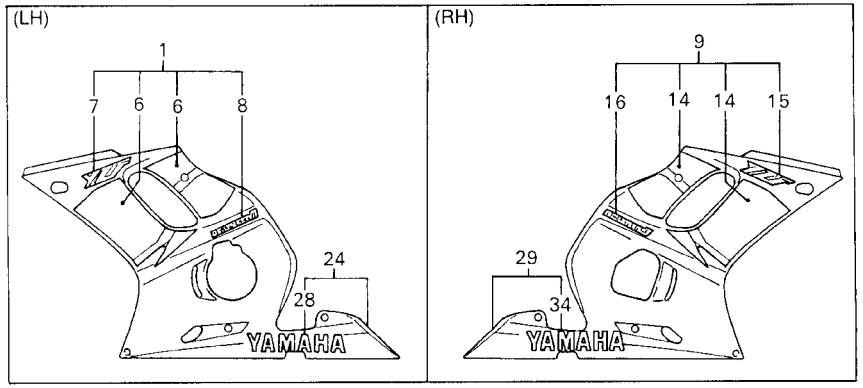

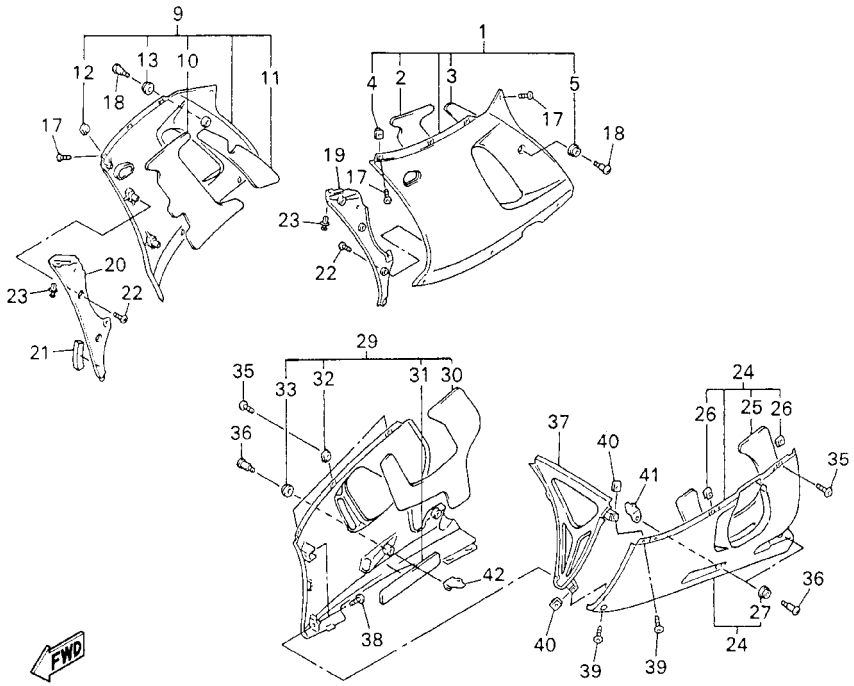

5MTD351-2370

FIG. 40 COWLING 2

REF. NO.	PART NO.	DESCRIPTION	5MTF	5MTG	5MTH			REMARKS
20	5EB–2836L–00	PANEL, INNER 2	1	1	1			
21	8U9–77268–00	LINING,SHROUD 8	1	1	1			
22	97704–40012	SCREW, TAPPING	6	6	6			
23	90269–07076	RIVET	2	2	2			
24	5EB–Y2808–70–P1	COVER ASSY, UNDER	1	1	1			UR DPBMC
	5EB–Y2808–70–4B	COVER ASSY, UNDER	1	1	1			UR BL2 FOR VRC1
25	5EB–2834E–00	.DAMPER	1	1	1			
26	90183–05024	.NUT, SPRING	2	2	2			
27	90480–13398	.GROMMET	2	2	2			
28	4XV–2153E–00	.EMBLEM, YAMAHA	1	1	1			
29	5EB–Y2809–70–P1	COVER ASSY 2, UNDER	1	1	1			UR DPBMC
	5EB–Y2809–70–4B	COVER ASSY 2, UNDER	1	1	1			UR BL2 FOR VRC1
30	5EB–2834F–00	.DAMPER	1	1	1			
31	5EB–2838G–00	.SEAT 1	1	1	1			
32	90183–05024	.NUT, SPRING	3	3	3			
33	90480–13398	.GROMMET	2	2	2			
34	4XV–2153E–00	.EMBLEM, YAMAHA	1	1	1			
35	90150–05039	SCREW, ROUND HEAD	5	5	5			
36	90150–06036	SCREW, ROUND HEAD	4	4	4			
37	5EB–2836M–00	PANEL, INNER 3	1	1	1			
38	97707–50016	SCREW, TAPPING	2	2	2			
39	90150–05039	SCREW, ROUND HEAD	2	2	2			
40	90183–05024	NUT, SPRING	2	2	2			
41	5EB–2836A–00	BRACKET 1	1	1	1			
42	5EB–2836E–00	BRACKET 2	1	1	1			

FIG. 41 GENERATOR

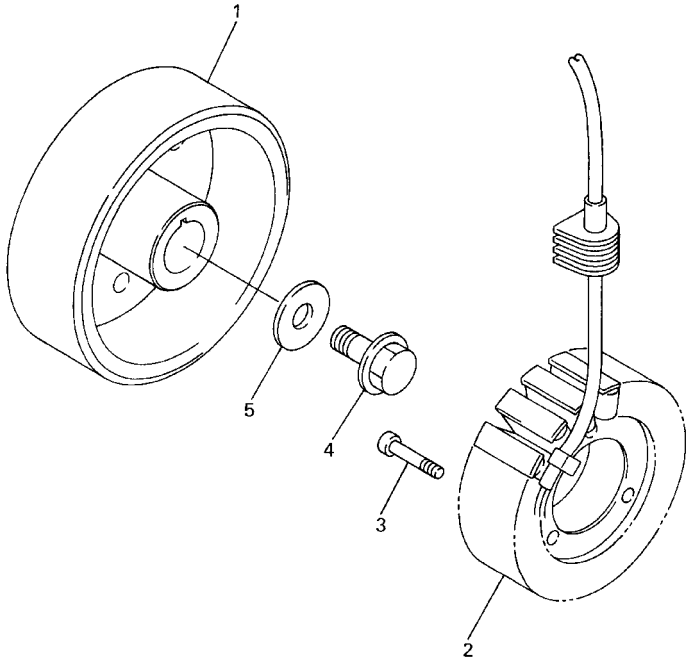

5EB3351-9380

REF. NO.	PART NO.	DESCRIPTION	5MTF	5MTG	5MTH			REMARKS
1	5EB–81450–00	ROTOR ASSY	1	1	1			
2	5EB–81410–00	STATOR ASSY	1	1	1			
3	91317–06035	BOLT	3	3	3			
4	90105–126A8	BOLT, FLANGE	1	1	1			
5	90201–12008	WASHER, PLATE	1	1	1			

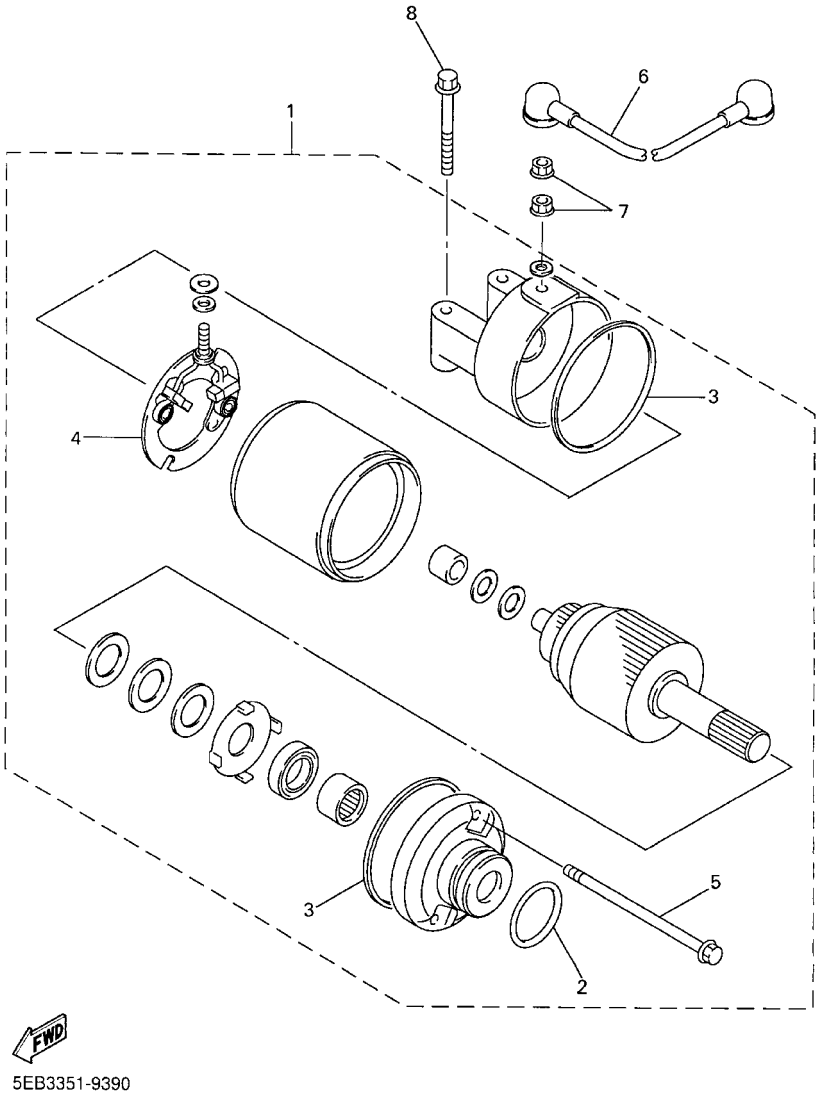

FIG. 42 STARTING MOTOR

REF. NO.	PART NO.	DESCRIPTION	5MTF	5MTG	5MTH			REMARKS
1	5EB–81890–00	MOTOR ASSY	1	1	1			
2	1FK–81847–00	.O–RING	1	1	1			
3	4WP–81844–00	.GASKET	2	2	2			
4	4WP–81801–00	.BRUSH SET	1	1	1			
5	4WP–81826–00	.BOLT	2	2	2			
6	4XV–81815–00	CORD, STARTER MOTOR	1	1	1			
7	4XV–8182A–00	NUT	2	2	2			
8	95027–06040	BOLT, FLANGE	2	2	2			

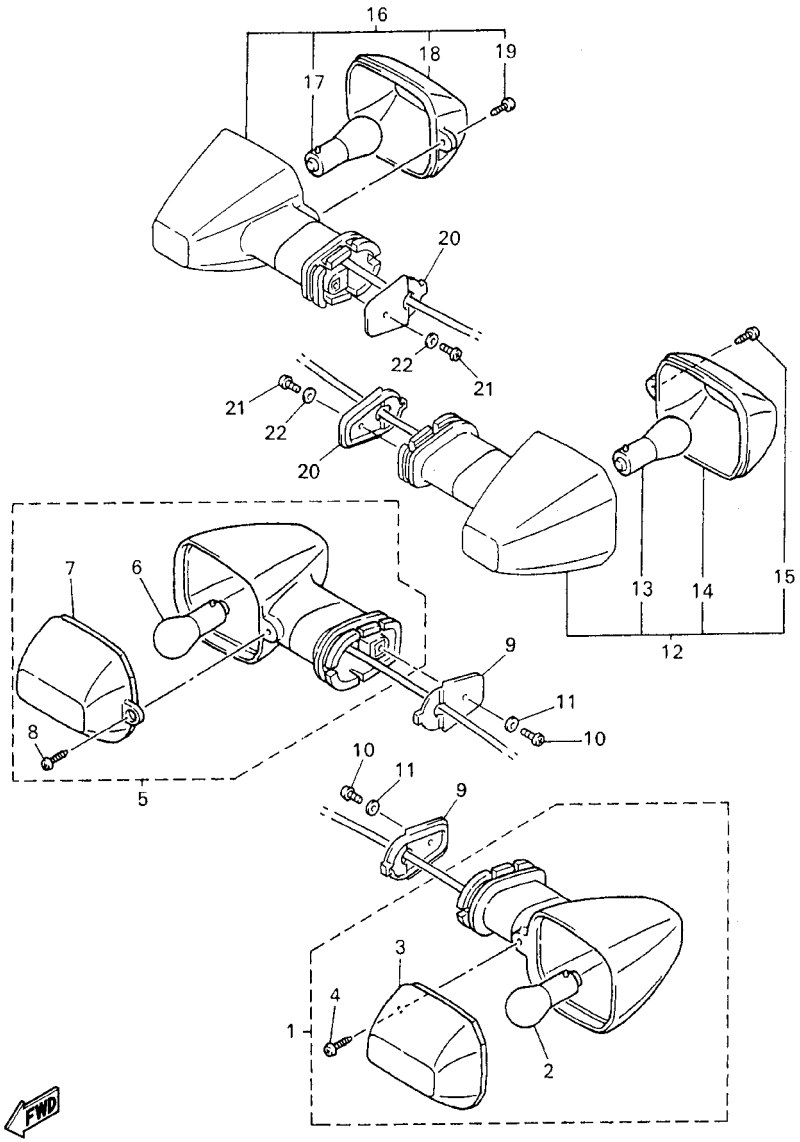

5MT5100-1430

FIG. 43 FLASHER LIGHT

REF. NO.	PART NO.	DESCRIPTION	5MTF	5MTG	5MTH			REMARKS
1	4JH–83310–11	FRONT FLASHER LIGHT ASSY 1	1	1	1			
2	256–84714–61	.BULB (12V–27/8W)	1	1	1			
3	4JH–83332–10	.LENS, FLASHER	1	1	1			
4	97702–40610	.SCREW, TAPPING	1	1	1			
5	4JH–83320–11	FRONT FLASHER LIGHT ASSY 2	1	1	1			
6	256–84714–61	.BULB (12V–27/8W)	1	1	1			
7	4JH–83342–10	.LENS, FLASHER 2	1	1	1			
8	97702–40610	.SCREW, TAPPING	1	1	1			
9	5MT–83318–00	STAY, FLASHER 1	2	2	2			
10	98507–04008	SCREW, PAN HEAD	2	2	2			
11	92907–04600	WASHER	2	2	2			
12	5MT–83330–10	REAR FLASHER LIGHT ASSY 1	1	1	1			
13	256–83311–70	.BULB (12V–27W)	1	1	1			
14	4JH–83342–10	.LENS, FLASHER 2	1	1	1			
15	97702–40610	.SCREW, TAPPING	1	1	1			
16	5MT–83340–10	FLASHER LIGHT ASSY 2	1	1	1			
17	256–83311–70	.BULB (12V–27W)	1	1	1			
18	4JH–83332–10	.LENS, FLASHER	1	1	1			
19	97702–40610	.SCREW, TAPPING	1	1	1			
20	5MT–83318–00	STAY, FLASHER 1	2	2	2			
21	98507–04008	SCREW, PAN HEAD	2	2	2			
22	92907–04600	WASHER	2	2	2			

FIG. 44 METER

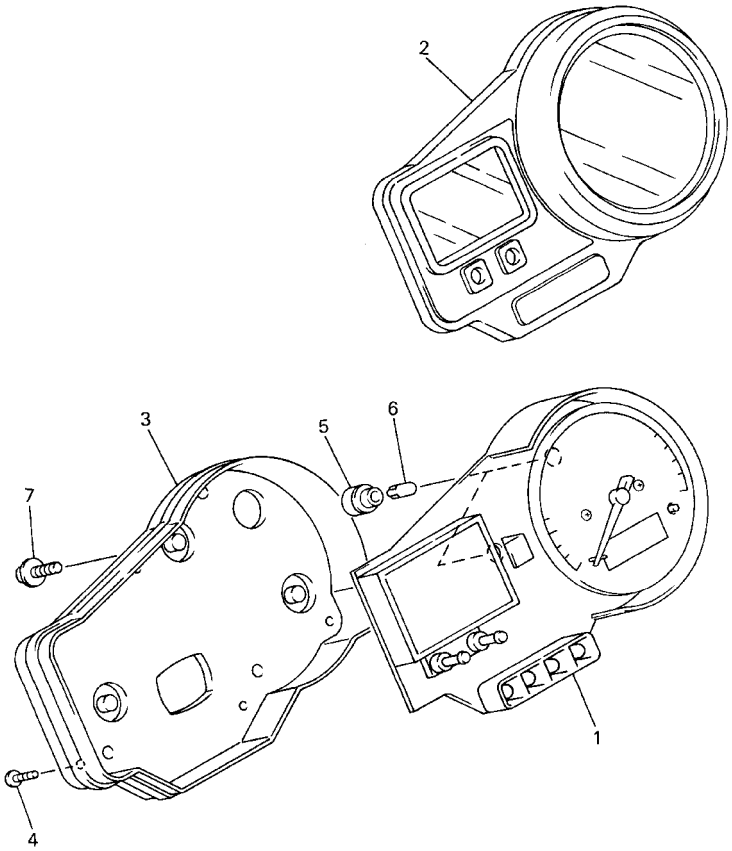

REF. NO.	PART NO.	DESCRIPTION	5MTF	5MTG	5MTH			REMARKS
1	5MT–83570–20	SPEEDOMETER ASSY	1					
	5MT–83570–30	SPEEDOMETER ASSY		1				
	5MT–83570–00	SPEEDOMETER ASSY			1			
2	5MT–8353E–00	CASE, METER UPPER	1	1	1			
3	4XV–83572–01	CASE, SPEEDOMETER LOWER	1	1	1			
4	97707–40020	SCREW, TAPPING	4	4	4			
5	4YR–83534–00	SOCKET, NEUTRAL	2	2	2			
6	4YR–83517–10	BULB (12V–2W T5)	2	2	2			
7	90164–05014	SCREW, TAPPING	3	3	3			

FIG. 45 HEADLIGHT

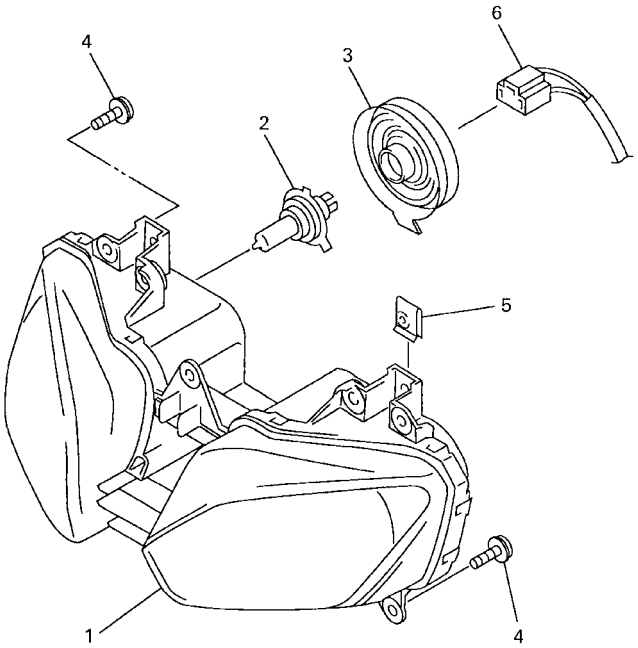

5GV1100-9430

REF. NO.	PART NO.	DESCRIPTION	5MTF	5MTG	5MTH			REMARKS
1	5EB–84310–20	HEADLIGHT UNIT ASSY	1	1	1			
2	8V0–84314–00	BULB (12V–60/55W)	2	2	2			
3	4SV–84397–00	COVER, SOCKET	2	2	2			
4	90164–05014	SCREW, TAPPING	4	4	4			
5	90183–05024	NUT, SPRING	2	2	2			
6	5MT–84359–10	CORD, HEADLIGHT	1	1	1			

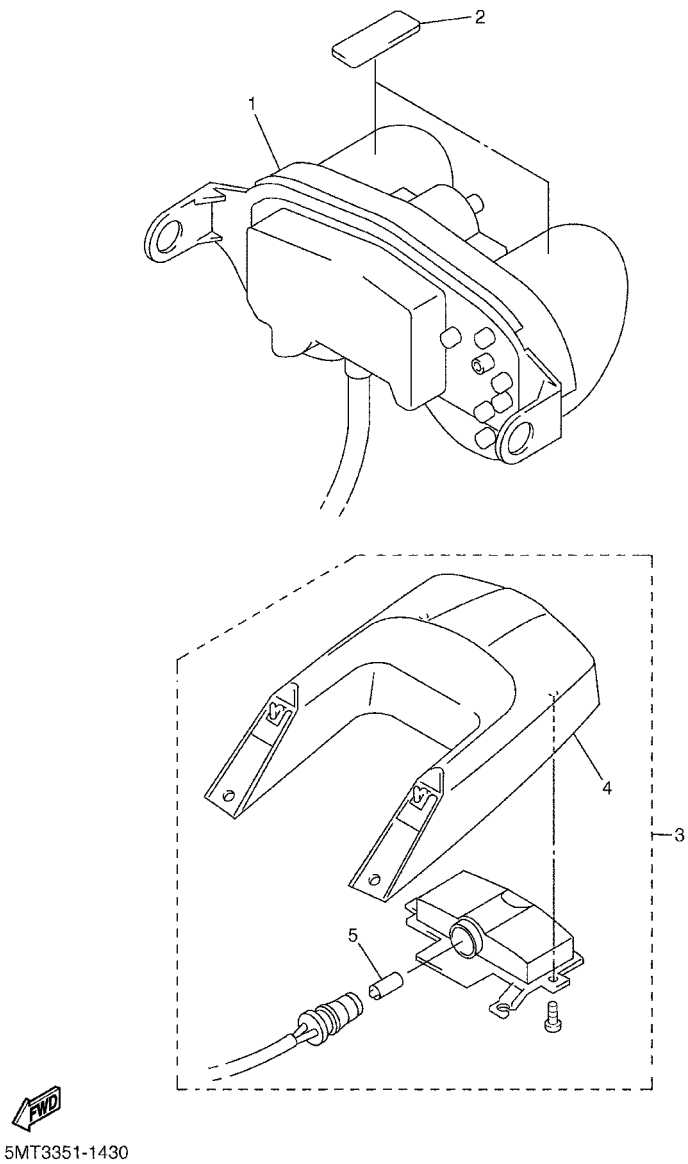

FIG. 46 TAILLIGHT

REF. NO.	PART NO.	DESCRIPTION	5MTF	5MTG	5MTH			REMARKS
1	5MT–84710–10	TAILLIGHT UNIT ASSY	1	1	1			
2	3TU–2475M–00	SEAL	2	2	2			
3	5MT–84745–00	LICENCE LIGHT UNIT ASSY	1	1	1			
4	5MT–84747–00	.COVER, LICENSE LIGHT	1	1	1			
5	4HC–84744–00	.BULB (12V–5W)	1	1	1			

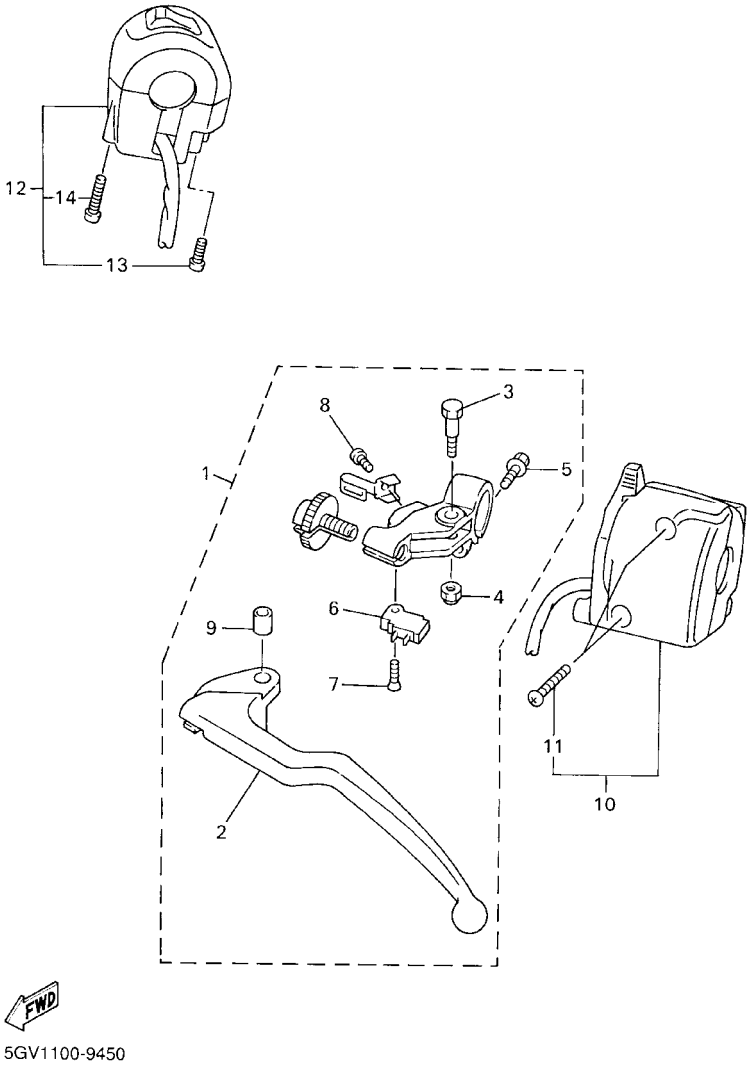

FIG. 47 HANDLE SWITCH. LEVER

REF. NO.	PART NO.	DESCRIPTION	5MTF	5MTG	5MTH			REMARKS
1	5EB–82910–02	LEVER HOLDER ASSY (LEFT)	1	1	1			
2	5EB–83912–01	.LEVER 1	1	1	1			
3	4XV–83945–00	.BOLT, LEVER	1	1	1			
4	95607–06100	.NUT, U	1	1	1			
5	95027–06020	.BOLT, FLANGE	1	1	1			
6	4XV–82917–00	.SWITCH	1	1	1			
7	98707–03016	.SCREW, FLAT HEAD	1	1	1			
8	98507–04010	.SCREW, PAN HEAD	1	1	1			
9	4XV–83913–00	.COLLAR, LEVER 1	1	1	1			
10	5MT–83973–00	SWITCH, HANDLE 3	1	1	1			
11	98507–05025	.SCREW, PAN HEAD	2	2	2			
12	5EB–83975–00	SWITCH, HANDLE 2	1	1	1			
13	98507–05030	.SCREW, PAN HEAD	1	1	1			
14	98507–05050	.SCREW, PAN HEAD	1	1	1			

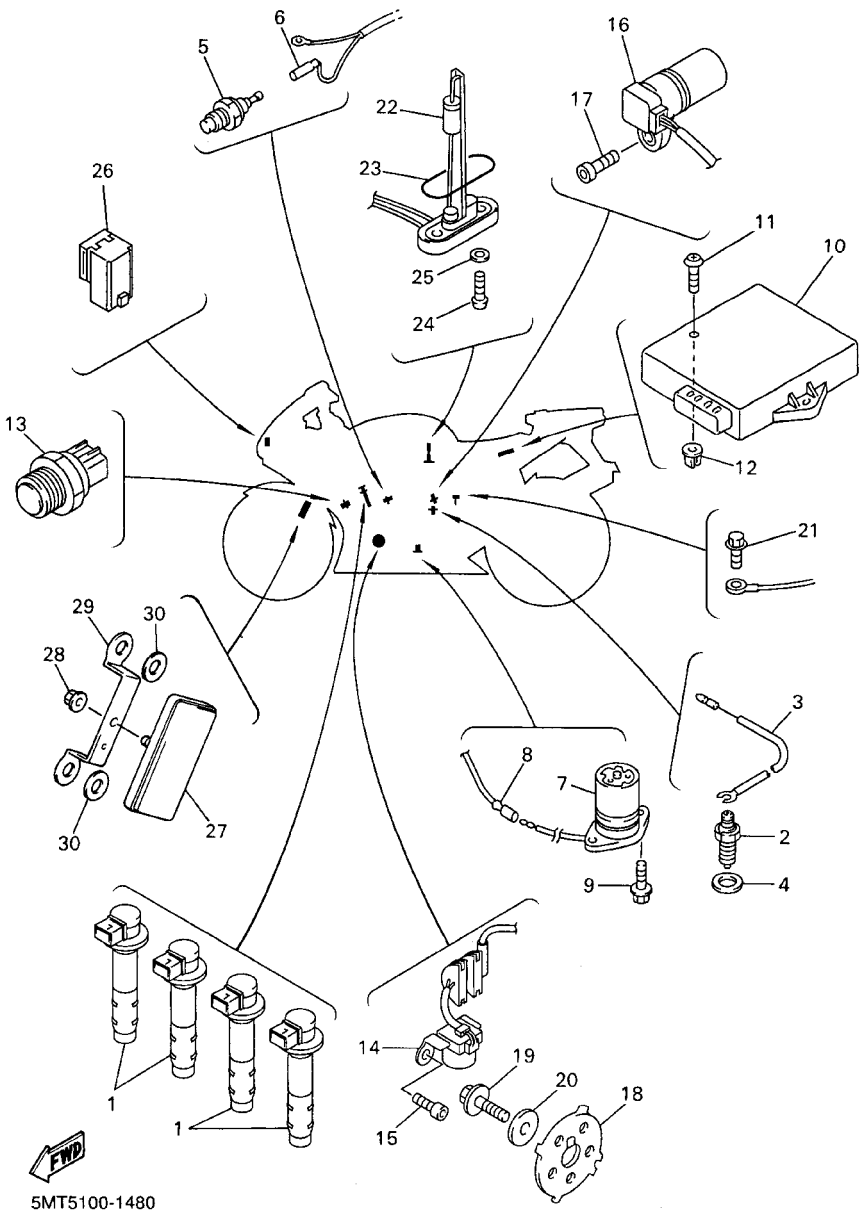

FIG. 48 ELECTRICAL 1

REF. NO.	PART NO.	DESCRIPTION	5MTF	5MTG	5MTH			REMARKS
1	5EB–82310–00	IGNITION COIL ASSY	4	4	4			
2	3GB–82540–01	NEUTRAL SWITCH ASSY	1	1	1			
3	5MT–82541–00	WIRE, LEAD	1	1	1			
4	90430–10148	GASKET	1	1	1			
5	11H–83591–00	THERMO UNIT	1	1	1			
6	5EB–82541–21	WIRE, LEAD	1	1	1			
7	5EB–85720–00	OIL LEVEL GAUGE ASSY	1	1	1			
8	5EB–82509–00	WIRE, SUB LEAD	1	1	1			
9	95027–06014	BOLT, FLANGE	2	2	2			
10	5MT–85540–30	C.D.I. UNIT ASSY	1		1			
	5MT–85540–40	C.D.I. UNIT ASSY		1				
11	97707–60020	SCREW, TAPPING	2	2	2			
12	90338–08226	PLUG	2	2	2			
13	5EB–82560–00	THERMO SWITCH ASSY	1	1	1			
14	5MT–81670–01	PICK–UP ASSY	1	1	1			
15	91317–06012	BOLT	2	2	2			
16	5EB–83755–00	SENSOR, SPEED	1	1	1			
17	91317–06016	BOLT	1	1	1			
18	5EB–81673–00	ROTOR	1		1			
	5GV–81673–00	ROTOR		1				
19	90105–08386	BOLT, FLANGE	1	1	1			
20	90201–08753	WASHER, PLATE	1	1	1			
21	95027–06014	BOLT, FLANGE	1		1			
22	1UF–85752–03	SENDER UNIT ASSY, FUEL METER	1	1	1			
23	42X–85753–00	GASKET, SENDER UNIT	1	1	1			
24	90149–06008	SCREW	2	2	2			
25	90202–05193	WASHER, PLATE	2	2	2			

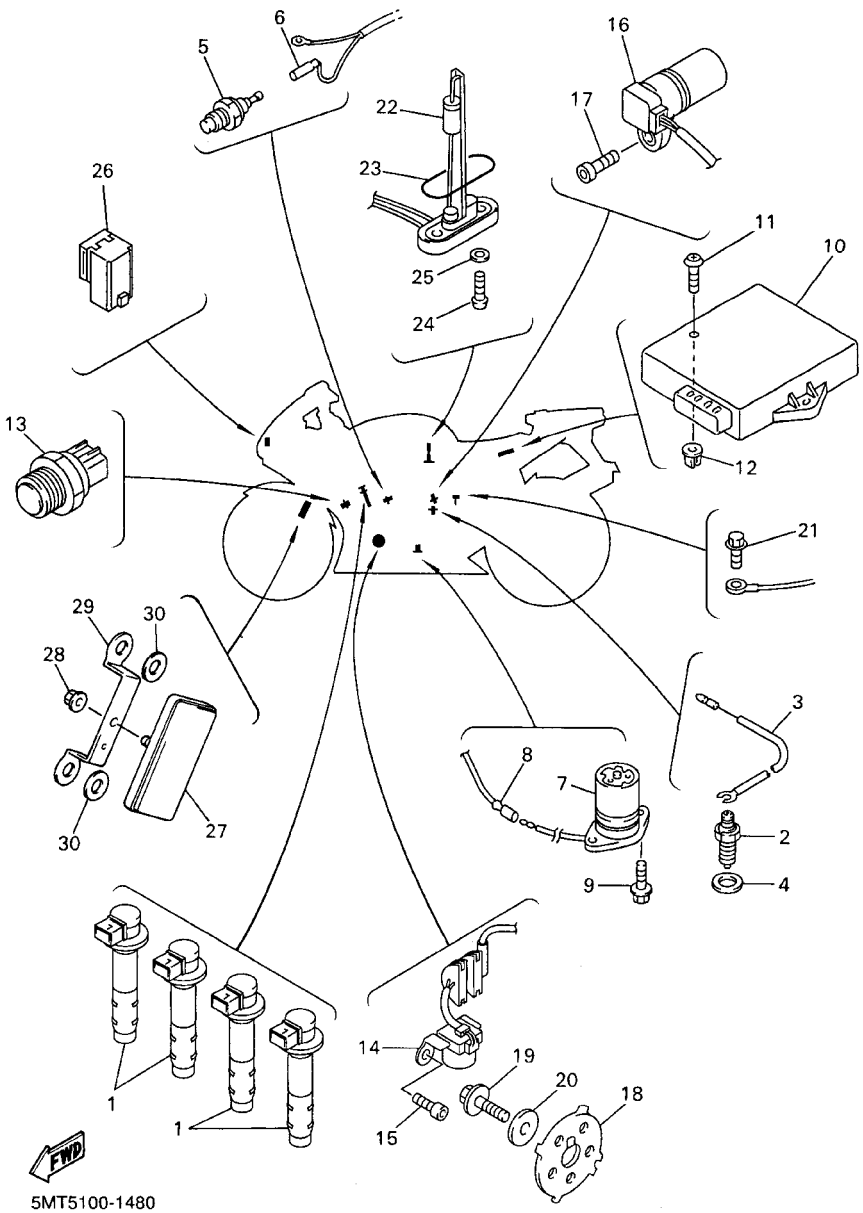

FIG. 48 ELECTRICAL 1

REF. NO.	PART NO.	DESCRIPTION	5MTF	5MTG	5MTH			REMARKS
26	5JJ–81950–10	RELAY ASSY	1	1	1			
27	11H–85110–01	REFLECTOR ASSY	2	2	2			
28	95707–05500	NUT, FLANGE	2	2	2			
29	5BN–85122–00	BRACKET, REFLECTOR 2	2	2	2			
30	90201–08759	WASHER, PLATE	4	4	4			

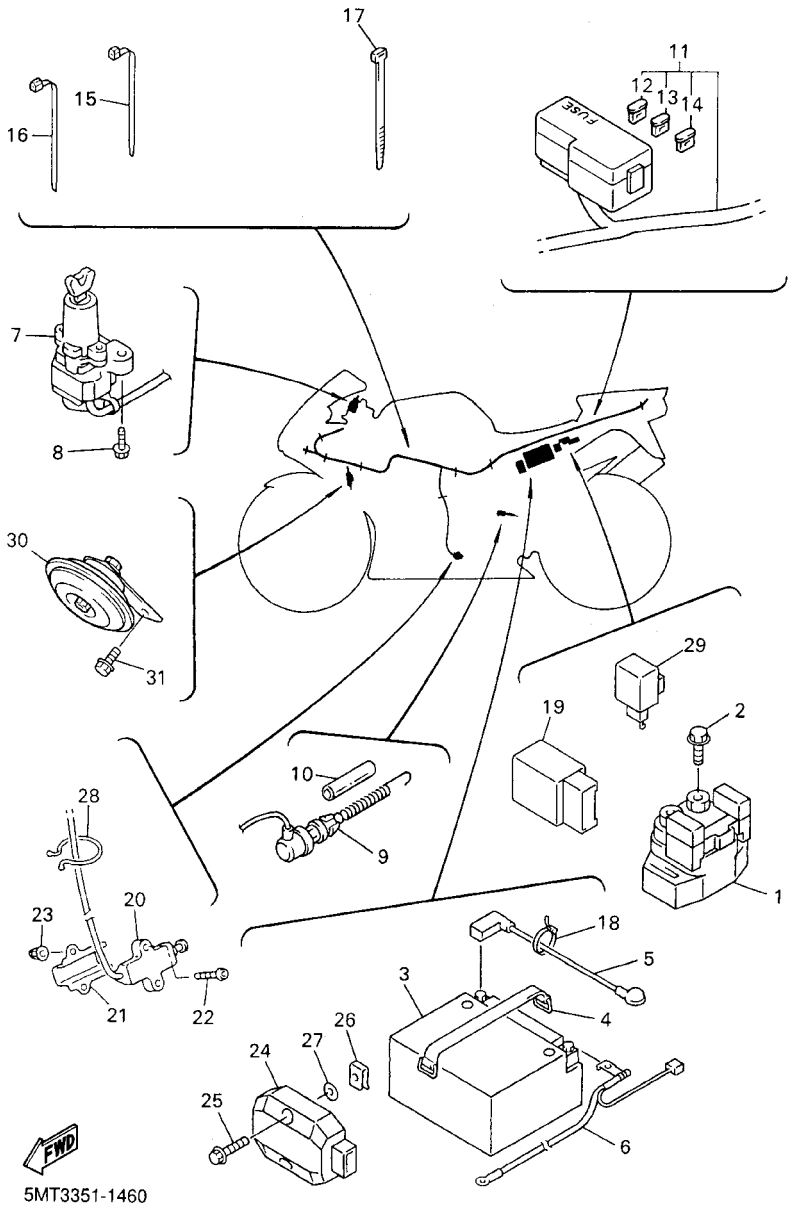

FIG. 49 ELECTRICAL 2

REF. NO.	PART NO.	DESCRIPTION	5MTF	5MTG	5MTH			REMARKS
1	4YR–81940–00	STARTER RELAY ASSY	1	1	1			
2	95027–06008	BOLT, FLANGE	2	2	2			
3	5FL–82100–00	BATTERY ASSY (GT9B–4)	1	1	1			
4	5JJ–82131–00	BAND, BATTERY	1	1	1			
5	5JJ–82115–00	WIRE, PLUS LEAD	1	1	1			
6	5MT–82116–10	WIRE, MINUS LEAD	1	1	1			
7	5EB–82501–11	MAIN SWITCH STEERING LOCK	1	1	1			
8	90109–080G5	BOLT	2	2	2			
9	3XV–82530–01	STOP SWITCH ASSY	1	1	1			
10	90446–08001	HOSE	1	1	1			
11	5MT–82590–10	WIRE HARNESS ASSY	1	1	1			
12	5JJ–82151–10	.FUSE (15A–BL)	3	3	3			
13	5JJ–82151–00	.FUSE (7.5A–BL)	3	3	3			
14	5JJ–82151–20	.FUSE (20A–BL)	2	2	2			
15	90464–12045	CLAMP	1	1	1			
16	90464–13073	CLAMP	1	1	1			
17	3MA–82591–00	BAND	2	2	2			
18	90464–13077	CLAMP	2	2	2			
19	5EB–81950–20	RELAY ASSY	1	1	1			
20	5EB–82566–00	SWITCH, SIDE STAND	1	1	1			
21	5JJ–82388–00	PLATE	1	1	1			
22	92017–05030	BOLT, BUTTON HEAD	2	2	2			
23	95607–05200	NUT, U FLANGE	2	2	2			
24	4JH–81960–01	RECTIFIER & REGULATOR ASSY	1	1	1			
25	95827–06025	BOLT, FLANGE	2	2	2			
26	90183–06053	NUT, SPRING	2	2	2			
27	90202–05187	WASHER, PLATE	2	2	2			

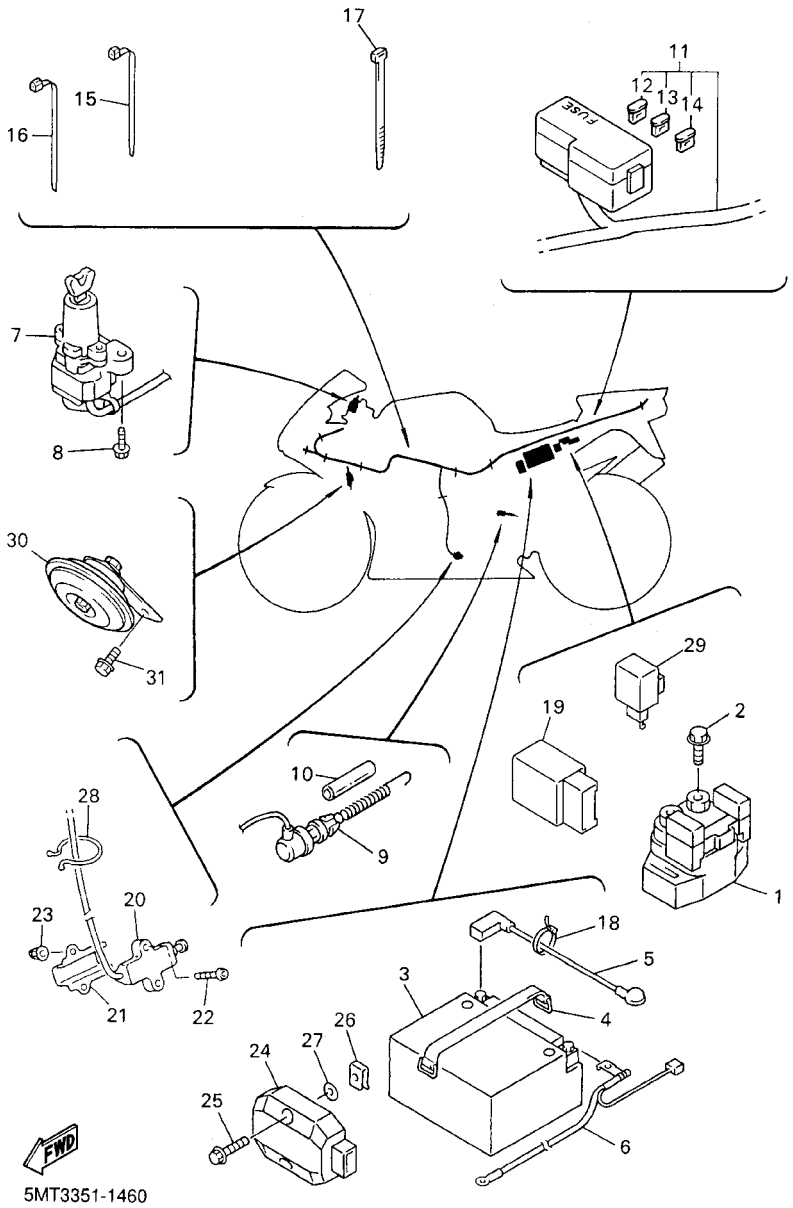

FIG. 49 ELECTRICAL 2

REF. NO.	PART NO.	DESCRIPTION	5MTF	5MTG	5MTH			REMARKS
28	90465–18147	CLAMP	1	1	1			
29	3GM–83350–01	FLASHER RELAY ASSY	1	1	1			
30	4TH–83371–00	HORN	1	1	1			
31	95807–06010	BOLT, FLANGE	1	1	1			

NUMERICAL INDEX

PART NO.	GRID NO.
5MT–W0041–00	F – 2
3TU–W0042–51	F – 7
4SV–W0045–00	E – 11
5EB–W0046–00	E – 14
3GM–W0047–10	E – 11
3MA–W0047–10	E – 11
4JG–W0047–00	E – 14
1J3–W0048–00	E – 11
51L–W0048–00	E – 14
4JG–W0057–00	E – 14
4SV–W0057–00	E – 11
4SV–W0057–10	E – 11
2TV–W2470–00	E – 9
5EB–W2587–01	F – 2
5EB–Y2171–E1–P0	D – 11
5EB–Y2171–G1–P1	D – 11
5EB–Y2410–30–X1	E – 4
	E – 6
5EB–Y2410–30–X2	E – 4
	E – 6
5EB–Y2808–70–P1	F – 12
5EB–Y2808–70–4B	F – 12
5EB–Y2809–70–P1	F – 12
5EB–Y2809–70–4B	F – 12
5EB–Y283G–B0–P0	F – 9
5EB–Y283G–50–1X	F – 9
5EB–Y283U–A0–P1	F – 11
5EB–Y283U–90–P3	F – 11
5EB–Y283V–A0–P3	F – 11
5EB–Y283V–B0–P1	F – 11
5GV–11101–10	B – 2
5MT–11101–00	B – 2
4KG–1111G–00	B – 2
5EB–11133–10	B – 2
5EB–11145–00	C – 11
5EB–11165–01	C – 11
5EB–11181–00	B – 2
5EB–11191–00	B – 2
5EB–11193–00	B – 2
5EB–11195–00	B – 2
214–11198–01	B – 12
5EB–11411–00	B – 3
5EB–11416–A0	B – 3
5EB–11416–00	B – 3
5EB–11416–10	B – 3
5EB–11416–20	B – 3
5EB–11416–30	B – 3
5EB–11603–10	B – 3

PART NO.	GRID NO.
5MT–11631–00	B – 3
5EB–11633–00	B – 3
5MT–11650–00	B – 3
5EB–11654–00	B – 3
4TV–11656–00	B – 3
4TV–11656–10	B – 3
4TV–11656–20	B – 3
4TV–11656–30	B – 3
5EB–12111–00	B – 4
5EB–12113–00	B – 4
5EB–12114–00	B – 4
5EB–12116–00	B – 4
5EB–12117–00	B – 4
1HX–12118–00	B – 4
4TV–12119–00	B – 4
5EB–12121–00	B – 4
5EB–12124–01	B – 4
5EB–12126–00	B – 4
5EB–12127–00	B – 4
5EB–12153–09	B – 5
5EB–12153–20	B – 5
1HX–12168–A0	B – 4
1HX–12168–F0	B – 4
1HX–12168–H1	B – 4
1HX–12168–K1	B – 4
1HX–12168–M1	B – 4
1HX–12168–R1	B – 4
1HX–12168–U1	B – 4
1HX–12168–W1	B – 4
1HX–12168–Y1	B – 4
1HX–12168–00	B – 4
1HX–12168–20	B – 4
1HX–12168–40	B – 4
1HX–12168–60	B – 4
1HX–12168–80	B – 4
1HX–12169–E0	B – 5
1HX–12169–G0	B – 5
1HX–12169–J0	B – 5
1HX–12169–L0	B – 5
1HX–12169–N0	B – 5
1HX–12169–T0	B – 5
1HX–12169–11	B – 4
1HX–12169–31	B – 4
1HX–12169–50	B – 5
1HX–12169–70	B – 5
1HX–12169–90	B – 5
5EB–12171–00	B – 6
5GV–12171–00	B – 6

PART NO.	GRID NO.
5EB–12176–00	B – 6
5EB–12181–00	B – 6
5GV–12181–00	B – 6
5MT–12210–00	B – 6
4FM–12213–00	B – 6
5BE–12241–00	B – 6
5EB–12251–00	B – 6
5EB–12252–00	B – 6
4SV–1240G–00	B – 7
5EB–12405–00	B – 9
3GM–12410–00	B – 9
5EB–12410–00	B – 9
5EB–12413–00	B – 9
5EB–12421–00	B – 7
5EB–12422–00	B – 7
5EB–1243A–00	B – 7
5EB–1243E–00	B – 7
5EB–1243F–00	B – 8
11H–12438–10	B – 7
5EB–12439–00	B – 7
5EB–1244E–00	B – 10
5EB–1244G–00	B – 8
5EB–12446–00	C – 6
	C – 9
5EB–12450–00	B – 7
3XV–1246A–10	B – 9
5GV–1246A–00	B – 7
5GV–1246E–00	B – 7
	B – 9
5EB–12461–00	B – 9
4JH–12462–00	B – 9
3VD–12465–00	D – 11
5EB–12469–00	B – 7
4TV–12486–00	C – 6
	C – 9
5Y9–12491–00	F – 7
5EB–12498–00	B – 9
5EB–12551–00	B – 8
5EB–12552–00	B – 8
5EB–12576–00	C – 6
	C – 9
5EB–12577–00	B – 7
5EB–12578–00	B – 9
4NK–12579–00	B – 7
5EB–12579–00	B – 9
4TV–12581–00	B – 8
5EB–12581–00	B – 7
5EB–12588–00	B – 9

PART NO.	GRID NO.
5EB–12589–00	B – 9
5EB–12659–00	B – 9
5EB–12668–00	B – 9
5EB–12682–01	D – 8
5GV–12682–00	D – 8
5EB–12822–00	B – 12
5EB–1316E–00	B – 11
5EB–13161–00	B – 11
5MT–13300–00	B – 11
5MT–13327–00	B – 11
5EB–13411–00	B – 11
5EB–13412–00	B – 11
5EB–13414–00	B – 12
5EB–13415–00	B – 11
5MT–13416–00	B – 11
5EB–13417–00	B – 12
5EB–13418–00	C – 11
5GH–13440–00	B – 12
5EB–13470–00	B – 12
4JH–13473–00	B – 12
5EB–13475–00	B – 12
3KS–13490–00	B – 12
16G–13569–00	B – 2
	B – 9
4TV–13575–00	F – 10
5EB–13581–01	B – 14
4MM–13582–00	B – 15
5EB–13586–00	B – 13
5EB–13898–00	B – 11
5EB–13907–01	E – 5
	E – 8
4JH–13918–00	C – 6
	C – 8
4YR–1410A–00	C – 5
	C – 8
5EB–14105–00	C – 5
	C – 7
5GV–14105–00	C – 5
5EB–14107–00	C – 5
	C – 7
4MM–14118–00	C – 5
	C – 8
5EB–14121–00	C – 5
	C – 8
4JH–14133–00	C – 5
	C – 8
4YR–14133–00	C – 5
	C – 8

PART NO.	GRID NO.
4JH–14137–00	C – 6
	C – 8
5EB–1414G–00	C – 4
	C – 7
5EB–14148–00	B – 15
5GV–14149–00	E – 8
5EB–14162–00	C – 5
	C – 8
3TJ–14191–40	C – 5
	C – 7
5EB–14197–00	B – 14
5EB–14197–01	C – 6
	C – 8
3TJ–14216–40	C – 6
	C – 8
4JH–14216–00	C – 4
	C – 7
4TV–14216–00	C – 6
	C – 8
4TV–14226–00	B – 14
5EB–14244–00	C – 4
	C – 7
3TJ–14245–40	C – 5
	C – 8
5EB–14251–00	C – 6
	C – 9
4JH–14264–00	C – 5
	C – 8
5EB–14294–00	E – 5
	E – 8
5EB–14298–00	C – 6
	C – 8
4TV–14348–00	B – 14
5EB–14348–00	B – 13
5EB–14349–00	B – 13
4JH–14350–00	C – 6
	C – 8
4JH–14358–00	C – 5
	C – 8
5EB–1440F–00	C – 6
	C – 8
5EB–1441F–01	B – 13
5EB–1441L–00	B – 13
5EB–14411–01	B – 13
5GV–14411–00	B – 13
5EB–14413–00	B – 13
5EB–14419–01	B – 14
5EB–14421–00	B – 13

PART NO.	GRID NO.
5EB–1443J–00	B – 14
5EB–1444J–01	B – 14
5EB–14450–01	B – 13
5EB–14452–00	B – 13
5EB–14453–00	B – 13
5EB–14454–00	C – 6
	C – 9
5EB–14457–00	B – 13
5EB–1446F–00	F – 10
5EB–1446R–10	B – 13
5EB–14462–00	B – 13
5GV–14465–00	E – 8
5EB–14466–00	B – 14
4X7–14467–01	B – 14
5EB–14467–00	B – 13
5EB–14477–00	B – 13
5EB–14485–00	B – 14
4JH–14487–00	C – 6
	C – 8
4JH–14515–00	C – 4
	C – 7
4TV–14534–00	C – 6
	C – 8
676–14548–00	C – 5
	C – 7
7A9–14555–00	C – 5
	C – 8
5GV–14556–00	C – 5
4TV–14557–00	C – 6
	C – 9
5GV–14557–00	C – 5
4TV–14562–00	C – 6
	C – 8
4JH–14565–00	C – 5
	C – 8
688–14592–00	C – 5
	C – 7
5MT–14602–00	C – 10
3YF–14613–01	C – 10
5GV–14710–00	C – 10
5EB–14714–00	C – 10
5EB–14733–00	D – 10
5GV–14808–00	C – 2
5GV–14815–00	C – 2
5GV–14834–00	C – 2
5GV–14840–00	C – 2
5GV–14844–00	C – 2
5GV–14849–00	C – 2

NUMERICAL INDEX

PART NO.	GRID NO.
5GV–14871–00	C – 2
5GV–14872–00	C – 2
5GV–14873–00	C – 2
5GV–14874–00	C – 2
5GV–14875–00	C – 2
5GV–14881–00	C – 2
5GV–14882–00	C – 2
5GV–14883–00	C – 2
5GV–14884–00	C – 2
4MM–14885–00	C – 2
5GV–14900–01	C – 7
5GV–14901–01	C – 4
	C – 7
5GV–14901–10	C – 4
5GV–14902–01	C – 4
	C – 7
5GV–14902–10	C – 4
5GV–14903–01	C – 4
	C – 7
5GV–14903–10	C – 4
5GV–14904–01	C – 4
	C – 7
5GV–14904–10	C – 4
5EB–14916–10	C – 4
	C – 7
5GV–14916–00	C – 4
	C – 7
5GV–14916–10	C – 4
5GV–14916–20	C – 4
5EB–14922–00	C – 5
	C – 8
5EB–14933–00	C – 4
	C – 7
4JH–14934–00	C – 5
	C – 8
5EB–14935–00	C – 5
	C – 8
5EB–14936–00	C – 4
	C – 7
5GV–14936–00	C – 4
5EB–14940–00	C – 4
	C – 7
5GV–14940–00	C – 4
3TJ–14943–87	C – 4
	C – 7
3TJ–14943–88	C – 4
	C – 7
5EB–14948–01	C – 5

PART NO.	GRID NO.
5EB–14948–02	C – 4
	C – 7
5EB–14958–00	C – 4
	C – 7
5EB–14984–00	C – 5
	C – 7
5EB–14985–00	C – 5
	C – 7
5MT–15100–01	C – 11
11H–15138–00	B – 2
5EB–15155–00	C – 11
5EB–15163–01	D – 3
36Y–15189–00	C – 12
5EB–15189–00	C – 11
5EB–15316–00	C – 12
3KJ–15337–00	D – 8
3F9–15362–00	C – 13
5EB–15362–00	C – 12
5EB–15371–00	C – 11
5EB–15373–00	C – 12
5EB–15393–00	C – 12
5EB–1541A–00	C – 14
5EB–15411–00	C – 13
5EB–15416–00	C – 13
5EB–15418–00	C – 13
5EB–15421–01	C – 13
5EB–15425–00	C – 13
5EB–15441–00	C – 14
5EB–15451–00	C – 13
5EB–15456–00	C – 13
5EB–15461–00	C – 13
5EB–15463–00	C – 14
5EB–15484–00	C – 13
5EB–15512–00	C – 15
5MT–15515–00	C – 15
5MT–15521–00	C – 15
5MT–15590–00	C – 15
5EB–16150–01	D – 2
5EB–16154–00	D – 2
1AE–16164–00	D – 2
4FN–16321–00	D – 2
168–16324–00	D – 2
3J2–16324–00	D – 2
5EB–16340–00	D – 2
132–16346–00	D – 6
5EB–16351–01	D – 2
5EB–16356–01	D – 2
5EB–16371–10	D – 2

PART NO.	GRID NO.
5EB–16382–00	D – 2
5EB–17121–00	D – 3
5EB–17131–00	D – 3
5MT–17151–00	D – 3
5EB–17161–00	D – 3
5EB–17211–00	D – 4
5EB–17221–00	D – 3
5EB–17231–00	D – 4
5EB–17241–00	D – 3
5MT–17251–00	D – 4
5MT–17261–00	D – 3
5EB–17411–00	D – 3
5EB–17421–00	D – 3
278–17424–01	D – 4
2GH–17460–00	D – 4
5MT–18101–00	D – 6
5EB–18110–10	D – 6
5EB–18112–01	D – 6
5EB–18113–00	D – 6
5EB–18115–00	D – 6
3TC–18116–00	D – 6
4XV–18127–00	D – 6
4XV–18140–00	D – 6
2H9–18154–00	D – 6
4XV–18154–00	D – 6
5EB–18511–00	D – 5
5MT–18512–00	D – 5
5EB–18513–00	D – 5
4XV–18531–00	D – 5
5EB–18536–00	D – 5
5MT–18540–00	D – 5
136–18542–00	D – 5
5EB–21110–01	D – 7
4XV–2117K–00	E – 9
5EB–2117M–00	D – 7
5EB–2117M–10	D – 7
5EB–2117V–00	D – 7
5EB–2117W–00	D – 7
5EB–21190–01	D – 7
4XV–21376–00	D – 10
5EB–2144G–00	F – 7
5EB–21446–00	D – 13
5EB–21495–00	D – 7
5EB–21511–00–P0	D – 9
5EB–21511–00–P1	D – 9
4TV–2153A–40	E – 4
	E – 6
4XV–2153E–00	F – 12

PART NO.	GRID NO.
5MT–2161G–00	D – 10
5MT–21611–00–P0	D – 9
5MT–21611–00–P1	D – 9
30X–21621–00	D – 13
5MT–21629–10	D – 10
36Y–21639–00	D – 7
4G0–21639–00	D – 10
	D – 9
	E – 9
51Y–21639–00	F – 9
5MT–21650–00	D – 13
5MT–21669–00	D – 9
5MT–21688–00	D – 10
5MT–21689–00	D – 10
5MT–21717–00	D – 10
5EB–2172W–00	D – 11
5MT–2172X–00	D – 9
5MT–2173E–00	D – 11
5MT–2173F–00	D – 11
3TU–2178A–00	F – 9
5EB–21781–30	D – 11
5MT–2179R–10	D – 13
5MT–2179V–10	D – 13
26H–21828–00	D – 11
5EB–21871–01	D – 11
5EB–21875–00	D – 11
5MT–22110–01	D – 12
5EB–22123–00	D – 12
5EB–22125–00	D – 12
5EB–22127–00	D – 12
3FV–22128–00	D – 12
4FN–22141–00	D – 12
5EB–22151–00	D – 12
5EB–2217A–00	D – 12
5EB–2217M–00	D – 12
5EB–22184–00	D – 12
5MT–22210–10	D – 14
5MT–22210–20	D – 14
5EB–22311–01	D – 12
5MT–23102–01	E – 2
5MT–23103–01	E – 2
5MT–23110–00	E – 2
5MT–23111–00	E – 2
	E – 3
5MT–23118–00	E – 2
	E – 3
5EB–23125–00	E – 2
5MT–23126–00	E – 2

PART NO.	GRID NO.
5MT–23136–00	E – 2
5MT–23141–00	E – 2
	E – 3
4PU–23144–00	E – 2
	E – 3
4PU–23145–01	E – 2
	E – 3
4V4–23146–L0	E – 2
	E – 3
3LR–23149–00	E – 2
	E – 3
3TJ–23149–10	E – 2
	E – 3
4V4–23153–L0	E – 2
	E – 3
2K8–23158–L0	E – 2
	E – 3
5MT–23170–00	E – 2
5EB–23171–00	E – 2
5MT–23173–00	E – 2
	E – 3
3LC–23181–00	E – 2
	E – 3
4V4–23188–L0	E – 2
	E – 3
5MT–23195–00	E – 2
	E – 3
4PU–2331G–00	E – 3
5MT–23340–00	E – 3
3LC–23357–00	E – 2
	E – 3
5EB–23377–00	D – 15
4XV–2341B–00	D – 15
4XV–23415–01	D – 15
4XV–23418–00	D – 15
5EB–23435–01	D – 15
3FV–23462–00	D – 15
2H9–23469–00	E – 15
5EB–23818–00	D – 15
5EB–2411J–00	E – 5
	E – 7
5EB–2414H–00	E – 5
	E – 7
5EB–2414J–00	E – 5
	E – 7
5EB–2414K–00	E – 5
	E – 7
5EB–2417H–00	E – 5

PART NO.	GRID NO.
5EB–2417H–00	E – 7
5GV–24170–00	E – 7
3UH–24180–00	E – 7
4FM–24181–00	C – 10
5EB–24181–00	E – 4
	E – 6
5EB–24182–00	E – 4
	E – 6
2GH–24183–00	E – 4
	E – 6
5EB–24183–00	E – 4
	E – 6
27V–24184–00	F – 9
2GH–24186–00	E – 4
	E – 6
5GV–2419F–00	E – 7
5MT–24191–00	E – 4
	E – 6
5MT–24240–30	E – 4
	E – 6
5MT–24240–40	E – 4
	E – 6
5EB–24311–00	E – 4
	E – 6
5EB–24312–00	E – 4
	E – 6
5GV–24314–00	E – 7
4DU–24321–00	E – 7
1AE–24366–00	E – 5
	E – 7
3H3–24376–00	E – 8
5EB–24491–00	E – 5
	E – 7
4TV–24500–00	E – 4
	E – 6
4X8–24512–00	E – 4
	E – 6
3LN–24515–00	B – 14
3XV–24523–00	E – 4
	E – 6
3XV–24534–00	E – 4
	E – 6
4TV–24560–00	E – 5
	E – 7
5JJ–24602–00	E – 5
	E – 7
5EB–2470F–00	E – 9
5EB–24710–00	E – 9

NUMERICAL INDEX

PART NO.	GRID NO.
5MT–24720–00	E – 9
3TU–2475M–00	G – 4
5JJ–2475X–01	E – 9
5MT–24750–02	E – 9
5EB–24751–00	E – 9
5MT–2478E–00	E – 9
4BP–24780–00	E – 9
5JJ–24792–01	E – 9
4XV–25117–00	E – 10
4XV–25168–00–33	E – 10
4XV–25181–00	E – 10
4XV–25317–00	E – 12
5EB–25338–00–33	E – 12
5EB–25364–01	E – 12
5EB–25366–01	E – 12
5EB–25376–00	E – 12
5EB–25377–00	E – 12
4XV–25381–00	E – 13
4XV–25383–00	E – 12
5EB–25388–00	E – 12
5EB–25389–00	E – 12
5MT–25398–00	E – 10
	E – 12
5MT–25398–10	E – 10
	E – 12
5MT–25398–20	E – 10
	E – 12
5GV–25446–20	E – 12
5EB–25448–20	E – 12
5DM–2580T–00	E – 11
5DM–2580U–00	E – 11
5EB–2580W–00	E – 14
4SV–2581T–00	E – 11
3LN–2582A–00	F – 7
5EB–2582F–00	F – 2
5EB–2582W–00	E – 14
5CG–25828–C0	E – 14
5EB–25828–00	E – 14
3TU–2583V–01	F – 7
3LN–2585F–00	F – 7
3LN–2585H–00	F – 7
3GM–25852–50	F – 2
3XP–25852–50	F – 7
2VN–25854–00	F – 7
3FV–25854–00	F – 2
2J2–25855–50	F – 2
2VN–25855–00	F – 7
2VN–25866–00	F – 2

PART NO.	GRID NO.
56A–25867–00	F – 2
5EB–25872–00	F – 2
5EB–25873–00	F – 2
5EB–25874–00	F – 8
3EN–25875–01	F – 3
2R8–25876–01	F – 3
5EB–25886–01	F – 8
5MT–25887–01	F – 8
3FV–2589A–00	F – 2
3FV–2589F–00	F – 2
3FV–2589G–00	F – 2
3GM–2589H–00	F – 2
3FV–25894–00	F – 2
5JJ–25894–00	F – 7
5MT–25895–00	F – 8
5JW–25914–00	E – 14
4SV–25919–00	E – 11
4TT–25919–00	E – 14
4SV–25924–00	E – 11
3GM–25925–00	E – 11
4TT–25937–00	E – 14
5MT–26121–00	E – 15
5MT–26122–00	E – 15
5EB–26132–00	D – 8
5EB–26240–00	E – 15
4YR–26241–01	E – 15
5EB–26246–00	E – 15
5MT–26280–00	F – 10
5MT–26290–00	F – 10
5MT–26292–00	F – 2
5EB–26298–01	F – 10
5EB–26311–00	E – 15
5EB–26312–00	E – 15
5EB–26331–00	E – 15
5EB–26332–00	F – 2
5EB–26335–00	E – 15
128–27114–00	F – 4
5EB–27211–01	F – 7
4XV–27222–01	F – 7
5EB–27311–00	F – 4
5JJ–27315–00	F – 4
5JJ–27321–00	F – 4
4NX–27351–00	F – 4
5GV–27352–00	F – 4
5MT–27410–00	F – 4
5MT–27420–00	F – 5
36Y–27424–00	F – 5
5EB–27430–00	F – 5

PART NO.	GRID NO.
4BP–27434–01	F – 4
1HX–27437–00	F – 5
5EB–27440–00	F – 5
5EB–27442–00	F – 4
5EB–27443–00	F – 5
5EB–27445–01	F – 4
5EB–27446–01	F – 5
5EB–27813–00	F – 7
5EB–28100–00	D – 10
4FM–28215–00	F – 9
5MT–28301–40	F – 11
5MT–28301–50	F – 11
5MT–28303–40	F – 11
5MT–28303–50	F – 11
5EB–28315–40	F – 9
5EB–28315–80	F – 9
5EB–28328–60	F – 11
5EB–28328–70	F – 11
1AE–2834E–00	D – 9
5EB–2834E–00	F – 12
5EB–2834F–00	F – 12
5EB–28342–01	F – 10
5EB–28356–01	F – 9
5EB–2836A–00	F – 12
5EB–2836E–00	F – 12
5EB–2836K–00	F – 11
5EB–2836L–00	F – 12
5EB–2836M–00	F – 12
5EB–2837J–00	F – 9
5EB–2837L–00	F – 9
5EB–2837M–00	F – 9
5EB–2837N–00	F – 9
5EB–28371–00	F – 10
5EB–2838G–00	F – 12
5EB–2838R–00	F – 10
5EB–2838T–00	F – 10
5EB–28381–10	F – 9
4XV–2839H–70	F – 11
4XV–2839H–80	F – 11
5EB–28415–00	F – 11
5EB–28415–10	F – 11
5EB–28416–00	F – 11
5EB–28416–10	F – 11
8U9–77268–00	F – 12
5EB–81410–00	F – 13
5EB–81450–00	F – 13
5MT–81670–01	G – 6
5EB–81673–00	G – 6

PART NO.	GRID NO.
5GV–81673–00	G – 6
4WP–81801–00	F – 14
4XV–81815–00	F – 14
4XV–8182A–00	F – 14
4WP–81826–00	F – 14
4WP–81844–00	F – 14
1FK–81847–00	F – 14
5EB–81890–00	F – 14
4YR–81940–00	G – 8
5EB–81950–20	G – 8
5JJ–81950–10	G – 7
4JH–81960–01	G – 8
5FL–82100–00	G – 8
5JJ–82115–00	G – 8
5MT–82116–10	G – 8
5MT–8212B–00	D – 9
5JJ–82131–00	G – 8
5JJ–82151–00	G – 8
5JJ–82151–10	G – 8
5JJ–82151–20	G – 8
5EB–82310–00	G – 6
5JJ–82388–00	G – 8
5EB–82501–11	G – 8
5EB–82509–00	G – 6
3XV–82530–01	G – 8
3GB–82540–01	G – 6
5EB–82541–21	G – 6
5MT–82541–00	G – 6
5EB–82560–00	G – 6
5EB–82566–00	G – 8
5MT–82590–10	G – 8
3MA–82591–00	D – 15
	G – 8
5EB–82910–02	G – 5
4XV–82917–00	G – 5
4JH–83310–11	F – 15
256–83311–70	F – 15
5MT–83318–00	F – 15
4JH–83320–11	F – 15
5MT–83330–10	F – 15
4JH–83332–10	F – 15
5MT–83340–10	F – 15
4JH–83342–10	F – 15
3GM–83350–01	G – 9
4TH–83371–00	G – 9
4XV–83513–00	D – 9
	F – 9
4YR–83517–10	G – 2

PART NO.	GRID NO.
5MT–8353E–00	G – 2
4YR–83534–00	G – 2
5MT–83570–00	G – 2
5MT–83570–20	G – 2
5MT–83570–30	G – 2
4XV–83572–01	G – 2
11H–83591–00	G – 6
5EB–83755–00	G – 6
5EB–83912–01	G – 5
4XV–83913–00	G – 5
5EB–83922–01	F – 2
4XV–83945–00	G – 5
5MT–83973–00	G – 5
5EB–83975–00	G – 5
4HM–83980–00	F – 2
5EB–84310–20	G – 3
8V0–84314–00	G – 3
5MT–84359–10	G – 3
4SV–84397–00	G – 3
5MT–84710–10	G – 4
256–84714–61	F – 15
4HC–84744–00	G – 4
5MT–84745–00	G – 4
5MT–84747–00	G – 4
5MT–84751–00	D – 10
11H–85110–01	G – 7
5BN–85122–00	G – 7
3Y6–85130–02	D – 10
5MT–85540–30	G – 6
5MT–85540–40	G – 6
5EB–85720–00	G – 6
1UF–85752–03	G – 6
42X–85753–00	G – 6
4TV–85885–00	C – 6
	C – 8
9Y581–55115	E – 12
90101–08662	F – 4
90101–08766	E – 12
90101–10709	D – 12
90105–06006	C – 11
90105–067A6	B – 2
90105–06718	F – 8
90105–07342	B – 6
90105–08386	E – 14
	G – 6
90105–086A9	C – 11
90105–087A0	C – 11
90105–08776	C – 11

PART NO.	GRID NO.
90105–10042	D – 7
90105–10271	F – 6
90105–10323	D – 12
90105–10376	D – 14
90105–105A7	E – 11
90105–106A2	D – 7
90105–12004	D – 7
90105–126A8	F – 13
90109–064G6	E – 11
	E – 14
90109–065G3	C – 11
90109–066F0	B – 2
90109–080G5	G – 8
90109–08018	F – 4
	F – 5
90109–085G6	F – 4
	F – 5
90109–103A9	F – 4
	F – 5
90109–105G7	F – 4
90110–05112	E – 5
	E – 7
90110–06001	B – 11
90110–06091	C – 11
90110–06149	B – 7
90110–06200	E – 8
90110–06225	B – 12
90110–06226	B – 11
	C – 11
	D – 5
	F – 4
90110–06258	E – 9
90111–06003	F – 4
	F – 5
90111–06019	D – 6
90111–10018	D – 7
90116–10485	E – 12
90119–06009	D – 9
90119–06010	D – 9
90119–06052	D – 13
90119–06096	E – 5
	E – 7
90119–06117	D – 11
	D – 15
90119–06172	B – 14
90119–06227	D – 12
90119–10003	B – 2
90149–04278	D – 10

NUMERICAL INDEX

PART NO.	GRID NO.
90149–05273	F – 9
90149–06001	C – 11
90149–06008	E – 4
	E – 6
	G – 6
90149–06285	D – 3
90149–06302	D – 13
90149–06308	E – 9
90149–08329	C – 15
90150–05023	F – 9
90150–05039	D – 11
	F – 11
	F – 12
	F – 9
90150–06036	D – 11
	F – 11
	F – 12
90154–05005	F – 9
90154–05041	D – 9
90154–05059	D – 7
90154–06061	D – 9
90159–05028	B – 14
90159–06002	D – 2
90159–06005	E – 4
	E – 6
90159–06056	F – 7
90159–06150	F – 7
90164–05014	G – 2
	G – 3
90170–08358	D – 6
90170–20327	D – 2
90170–28419	D – 15
90176–06055	F – 10
90179–05523	F – 10
	F – 9
90179–06635	E – 9
90179–07652	B – 3
90179–08410	C – 10
90179–10696	D – 7
90179–18020	D – 4
90179–30691	D – 15
90183–05024	D – 10
	F – 11
	F – 12
	F – 9
	G – 3
90183–05061	D – 11
	D – 9

PART NO.	GRID NO.
90183–05074	F – 9
90183–06053	F – 8
	G – 8
90185–18104	D – 12
90185–24165	E – 13
90201–05725	D – 10
90201–06008	E – 9
90201–06042	F – 4
	F – 5
90201–06050	E – 4
	E – 6
90201–06057	D – 10
90201–06071	B – 10
90201–081R9	F – 4
90201–08326	F – 4
90201–086J0	E – 15
90201–087K3	C – 11
90201–08753	G – 6
90201–08759	G – 7
90201–101J1	D – 12
	F – 4
90201–10118	F – 3
	F – 8
90201–10614	D – 2
90201–10669	F – 6
90201–12008	F – 13
90201–12013	D – 6
90201–146F9	F – 4
90201–154E8	D – 6
90201–177G4	D – 6
90201–186M4	D – 12
90201–20278	D – 4
90201–255A6	D – 2
90201–257R5	E – 13
90201–281U8	D – 15
90202–05187	G – 8
90202–05193	E – 4
	E – 6
	G – 6
90202–06056	C – 5
	C – 8
90202–30235	D – 15
90206–12074	D – 6
90206–17084	F – 7
90209–21332	D – 3
90209–21351	D – 3
90209–22352	D – 3
90209–25342	D – 3

PART NO.	GRID NO.
90209–25349	D – 3
90209–25350	D – 3
90215–20231	D – 2
90215–21022	D – 4
90243–08029	F – 4
	F – 5
90269–07076	D – 13
	D – 7
	F – 10
	F – 12
90269–07077	D – 11
	D – 7
	D – 9
90338–05194	B – 15
90338–05271	B – 15
90338–06018	E – 9
90338–08174	B – 13
	B – 14
90338–08226	G – 6
90338–16262	C – 11
90340–14132	B – 12
90340–27001	B – 2
90340–32116	C – 13
90387–060G7	E – 5
	E – 7
90387–0600V	D – 13
90387–0602X	F – 10
90387–06023	F – 7
90387–06027	E – 4
	E – 6
90387–061W6	E – 4
	E – 6
90387–062L2	E – 8
90387–06372	D – 12
90387–064H8	F – 5
90387–065G0	D – 10
	D – 9
90387–065J6	B – 14
	D – 9
90387–066K1	D – 11
90387–07391	B – 9
90387–09001	D – 6
90387–1012B	D – 12
90387–1013U	D – 14
90387–10636	F – 5
90387–1214V	D – 7
90387–127W0	D – 12
90387–1312P	D – 7

PART NO.	GRID NO.
90387–1414W	D – 7
90387–2200T	E – 10
90387–2202V	D – 4
90387–2504A	D – 3
90387–2513E	D – 3
90387–253M6	D – 3
90387–2813C	D – 3
90387–2813D	D – 3
90401–10160	F – 2
90401–10172	F – 3
	F – 8
90401–20145	B – 12
90413–07023	B – 8
90413–09032	B – 14
90413–10016	B – 13
90413–18033	B – 14
90430–06014	B – 7
	C – 11
90430–08119	B – 2
90430–08143	C – 13
90430–10148	G – 6
90445–08605	D – 11
90445–087K6	B – 10
90445–09488	B – 15
90445–09500	B – 15
90445–09541	B – 15
90445–097E9	C – 3
90445–097H2	B – 15
90445–102G9	E – 5
	E – 7
90445–11147	B – 14
90445–11262	B – 14
90445–11795	B – 13
90445–123G5	B – 8
90445–19002	F – 4
90445–307K7	B – 14
90446–08001	G – 8
90446–15386	F – 7
90450–25037	B – 9
90450–35001	B – 7
	B – 9
90450–38040	B – 7
90450–54093	B – 13
90450–68094	B – 14
90460–59211	F – 10
90461–10004	C – 13
90461–10132	D – 15
90462–10182	C – 13

PART NO.	GRID NO.
90464–07259	D – 9
90464–09009	D – 10
90464–10112	D – 9
90464–12036	D – 7
90464–12045	G – 8
90464–12089	E – 5
	E – 7
90464–13073	B – 15
	D – 9
	G – 8
90464–13077	D – 9
	E – 15
	G – 8
90464–13133	D – 9
90464–15157	E – 15
90464–15195	E – 15
90464–16025	F – 9
90464–20213	D – 8
90465–04013	D – 10
90465–08395	B – 8
90465–10020	B – 12
90465–18147	G – 9
90467–08003	D – 11
90467–08017	B – 15
	C – 3
90467–08075	B – 10
90467–08092	C – 3
90467–09037	B – 15
	B – 8
90467–10008	E – 5
	E – 7
	E – 8
90467–10041	B – 13
90467–11019	D – 11
90467–11028	B – 2
	B – 9
90467–11044	B – 8
	E – 5
	E – 8
90467–11090	B – 7
	B – 8
90467–12085	F – 2
90467–12191	F – 8
90467–14015	C – 12
90467–14057	E – 4
	E – 6
	F – 8
90467–15012	B – 14

PART NO.	GRID NO.
90467–15054	B – 14
	C – 12
	C – 2
90467–15197	B – 13
	B – 14
90467–16098	B – 14
90467–16195	C – 12
	C – 2
90467–17128	B – 15
	C – 2
90467–18196	C – 12
90467–19051	C – 2
90467–19160	B – 9
90467–20030	B – 14
90467–21068	C – 2
90467–23067	C – 2
90480–12003	D – 13
90480–12005	D – 13
90480–12072	D – 9
90480–12314	B – 14
90480–12607	F – 7
90480–13018	E – 7
90480–13163	E – 5
	E – 7
90480–13398	D – 11
	F – 11
	F – 12
90480–15363	B – 9
90501–064L1	D – 5
90501–12743	F – 5
90501–225A9	D – 2
90506–14003	D – 6
90506–18003	F – 4
90506–20193	F – 7
90508–165B1	D – 2
90508–183B9	F – 4
90508–184B0	F – 5
90508–295B2	D – 6
90560–25270	D – 2
91314–06018	C – 14
91314–06020	C – 13
91314–06025	C – 13
	C – 14
91314–06045	F – 5
91314–08025	E – 3
91314–08030	D – 15
	E – 15
91314–08035	E – 3

NUMERICAL INDEX

PART NO.	GRID NO.
91317–05010	E – 5
	E – 7
91317–06012	D – 15
	G – 6
91317–06016	G – 6
91317–06020	B – 13
	B – 7
	B – 9
	C – 2
	E – 15
91317–06025	B – 12
	B – 6
91317–06030	B – 11
91317–06035	F – 13
91317–06045	B – 2
91317–06090	E – 4
	E – 6
91380–06016	C – 2
91401–16012	F – 7
91701–06018	F – 7
91808–17032	B – 12
92014–08012	C – 13
92017–05030	G – 8
92017–06014	C – 11
92017–06020	D – 10
92017–08030	F – 7
92017–10040	D – 7
92902–04100	F – 2
92902–04600	F – 2
92907–04600	F – 15
92907–06200	F – 7
92907–06600	E – 4
	E – 5
	E – 6
	E – 7
92907–08600	D – 2
92990–06600	C – 10
93101–12004	D – 6
93101–12173	B – 7
93102–15212	D – 2
93102–35423	D – 4
93106–28043	E – 10
93106–35042	E – 12
93106–40041	E – 12
93109–17071	D – 12
	D – 14
93109–33049	D – 12
93210–04092	C – 11

PART NO.	GRID NO.
93210–06667	B – 11
93210–09165	B – 11
	C – 12
93210–12790	C – 11
93210–14579	B – 11
	C – 11
93210–15566	B – 12
93210–15620	F – 2
93210–16325	C – 12
93210–27194	C – 13
93210–32172	C – 13
93210–33133	B – 7
93210–47675	B – 7
93306–00106	B – 7
93306–00304	D – 2
93306–00420	E – 10
93306–07806	E – 12
93306–20464	D – 3
	D – 4
93306–27802	E – 12
93306–30525	D – 3
93306–30546	D – 3
93310–340N8	D – 2
93315–31502	D – 2
93315–31759	D – 12
	D – 14
93315–42523	D – 12
93315–42536	D – 12
93317–11020	D – 2
93317–11287	D – 6
93317–43580	E – 12
93399–99932	D – 15
93440–10153	B – 2
93440–25084	D – 3
93440–28062	D – 3
93450–17129	B – 3
93501–04011	F – 5
93607–44190	B – 6
93608–17263	C – 13
93900–00030	E – 10
	E – 12
94112–17019	E – 10
94118–17011	E – 12
94580–25080	B – 11
94591–49120	B – 6
94681–55031	E – 12
94701–00402	B – 2
94701–00403	B – 2

PART NO.	GRID NO.
95024–06016	F – 9
95024–06020	B – 7
95024–06030	D – 9
95027–06008	G – 8
95027–06012	E – 5
	E – 7
	F – 2
95027–06014	E – 8
	G – 6
95027–06020	F – 3
	G – 5
95027–06030	D – 7
95027–06040	F – 14
95027–08012	B – 2
95027–08035	D – 7
95027–12060	D – 7
95304–06700	D – 6
95307–08600	E – 13
95307–08700	F – 7
95604–06200	F – 5
95604–08100	F – 7
95606–06100	F – 2
95607–04100	D – 10
95607–05100	D – 10
95607–05200	G – 8
95607–06100	D – 10
	G – 5
95607–10200	D – 12
	D – 14
	E – 12
	F – 4
	F – 6
95617–08625	B – 2
95617–10100	D – 12
95707–05500	D – 10
	F – 9
	G – 7
95707–06500	D – 9
	E – 9
95807–06010	G – 9
95807–06012	D – 15
95807–06025	B – 9
95807–08014	C – 2
95811–06010	B – 9
95814–08025	C – 10
95817–06045	C – 11
95817–06055	C – 11
95817–06065	C – 11

PART NO.	GRID NO.
95817–08035	C – 10
95817–08065	C – 11
95824–06020	D – 6
95824–08025	F – 9
95827–06012	B – 10
95827–06025	G – 8
97007–06030	E – 4
	E – 6
97080–06008	C – 10
97702–40610	F – 15
97704–40012	F – 12
97707–40012	E – 9
97707–40020	G – 2
97707–50016	F – 12
97707–50120	B – 13
97707–60020	G – 6
98502–04012	F – 2
98502–04014	C – 5
	C – 7
98507–04008	F – 15
98507–04010	G – 5
98507–05010	E – 15
	E – 5
	E – 7
98507–05014	F – 10
98507–05025	B – 13
	G – 5
98507–05030	G – 5
98507–05050	G – 5
98507–06008	C – 13
98507–06010	C – 2
98507–06012	D – 8
	E – 5
	E – 7
98707–03016	G – 5
98907–05020	D – 10
98907–06012	C – 12
99001–07600	D – 2
99001–09600	D – 2
99009–12400	B – 7
99009–17400	D – 6
99009–52500	E – 12
99241–00080	D – 11
	F – 9
99530–08012	B – 11
	C – 13
	C – 14
99530–10014	C – 11

PART NO.	GRID NO.
99530–10114	B – 2

PART NO.	GRID NO.

CONTENTS

ENGINE

CYLINDER B2
CRANKSHAFT. PISTON B3
VALVE B4
CAMSHAFT. CHAIN B6
WATER PUMP B7
RADIATOR. HOSE B9
OIL PUMP B11
OIL CLEANER B12
INTAKE B13
AIR INDUCTION SYSTEM C2
CARBURETOR C4
CARBURETOR 2 . . . . . C7
EXHAUST C10
CRANKCASE C11
CRANKCASE COVER 1 . . . . . C13
STARTER C15
CLUTCH D2
TRANSMISSION D3
SHIFT CAM. FORK D5
SHIFT SHAFT D6

CHASSIS

FRAME D7
FENDER D9
SIDE COVER D11
REAR ARM D12
REAR SUSPENSION D14
STEERING D15
FRONT FORK E2
FUEL TANK E4
FUEL TANK 2 . . . . . E6
SEAT E9
FRONT WHEEL E10
FRONT BRAKE CALIPER E11
REAR WHEEL E12
REAR BRAKE CALIPER E14
STEERING HANDLE. CABLE E15
FRONT MASTER CYLINDER F2
STAND. FOOTREST F4
REAR MASTER CYLINDER F7
COWLING 1 . . . . . F9
COWLING 2 . . . . . F11
GENERATOR F13
STARTING MOTOR F14
FLASHER LIGHT F15
METER G2
HEADLIGHT G3
TAILLIGHT G4
HANDLE SWITCH. LEVER G5
ELECTRICAL 1 . . . . . G6
ELECTRICAL 2 . . . . . G8

INDEX

NUMERICAL INDEX M1